WIT Branch Locations

To Reach any of our locations toll free, please call

800-940-0197

ALABAMA

Birmingham
3825 4th Terrace N.
Birmingham, AL 35222
Phone: (205) 592-2309
Fax: (205) 592-2171

Florence
2809 Avalon Ave
Muscle Shoals, AL 35661
Phone: (256) 383-9181
Fax: (256) 383-9143

COLORADO

Denver
1221 East 56th/Unit #10
Denver, CO 80216
Phone: (303) 477-2838
Fax: (303) 477-3480

FLORIDA

Ft. Lauderdale
450 W. McNab Road Suite 2
Ft. Lauderdale, FL 33309
Phone: (954) 941-0671
Fax: (954) 941-0674

Orlando
4110 Mercy Industrial Ct.
Orlando, FL 32808
Phone: (407) 522-4417
Fax: (407) 930-5390

Tampa
4771 Distribution Dr.
Tampa, FL 33605
Phone: (813) 247-9202
Fax: (813) 247-9205

GEORGIA

Atlanta
1700B McCoba Drive
Smyrna, GA 30080
Phone: (770) 433-8317
Fax: (770) 433-8931

ILLINOIS

Chicago
5369 Wisconsin Ave.
Downer's Grove, IL 60515
Phone: (630) 963-1739
Fax: (630) 963-4841

INDIANA

Evansville
509 N. 9th Street
Evansville, IN 47711
Phone: (800) 423-4199
Fax: (812) 426-7382

Indianapolis
1508 S. Keystone Ave.
Indianapolis, IN 46203
Phone: (317) 471-8790
Fax: (317) 426-2683

KENTUCKY

Louisville
4282 E. Blue Lick Road
Louisville, KY 40229
Phone: (502) 955-6035
Fax: (502) 955-6077

MARYLAND

Baltimore / Washington DC
6700-B Distribution Drive
Beltsville, MD 20705
Phone: (301) 937-3912
Fax: (301) 595-7146

MICHIGAN

Grand Rapids
3765 Broadmoon Ave S.E.
Suite 1
Grand Rapids, MI 49512
Phone: (616) 957-3694
Fax: (616) 957-3928

MINNESOTA

Minneapolis
3765 Dunlap Street N.
Arden Hills, MN 55112
Phone: (651) 484-5080
Fax: (651) 484-5099

MISSISSIPPI

Jackson
618 S. Gallatin St.
Jackson, MS 39204
Phone: (601) 355-0650
Fax: (601) 352-5510

MISSOURI

St. Louis
1525 Fairview Ave.
St. Louis, MO 63132
Phone: (314) 733-0003
Fax: (314) 733-0006

NORTH CAROLINA

Charlotte
1238 Amble Drive
Charlotte, NC 28206
Phone: (704) 716-7272
Fax: (704) 716-7265

Raleigh
6316 J. Richard Dr. Suite B
Raleigh, NC 27617
Phone: (919) 786-2357
Fax: (919) 786-2538

OHIO

Cincinnati
9814 Princeton-Glendale
Cincinnati, OH 45246
Phone: (513) 942-1300
Fax: (513) 942-1334

Cleveland
8515 Freeway Drive Unit A
Macedonia, OH 44056
Phone: (330) 908-1862
Fax: (330) 908-1868

Dayton
1000 Webster St.
Dayton, OH 45404
Phone: (937) 262-7452
Fax: (937) 262-7476

OKLAHOMA

Tulsa
10877 E. 11th Street
Tulsa, OK 74128
Phone: (918) 437-6444
Fax: (918) 437-6446

PENNSYLVANIA

Scranton
220 Clark Road
Duryea, PA 18642
Phone: (570) 655-4200
Fax: (570) 655-0900

TENNESSEE

Knoxville
501 Ambrose Street
Knoxville, TN 37921
Phone: (865) 687-4990
Fax: (865) 687-3745

Nashville
1212 Gallatin Pike
Madison, TN 37115
Phone: (615) 870-0903
Fax: (615) 870-0942

TEXAS

Austin
9503 Brown Lane Building 4
Suite 104
Austin, TX 78754
Phone: (512) 428-6672
Fax: (512) 428-6548

Dallas
9210 King Arthur Drive
Dallas, TX 75247
Phone: (214) 631-1950
Fax: (214) 631-1951

Ft. Worth
6504 Midway Road
Suite 130
Haltom City, TX 76117
Phone: (817) 222-9122
Fax: (817) 222-9709

Houston
3739 Yale Street
Houston, TX 77018
Phone: (832) 804-9369
Fax: (832) 831-9688

San Antonio
3011 E Commerce Street
San Antonio, TX 78220
Phone: (210) 384-9778
Fax: (210) 384-9104

UTAH

Salt Lake City
788 West 1355 South
Salt Lake City, Utah 84104
Phone: (801) 906-0696

VIRGINIA

Richmond
5383 Glen Alden Drive
Richmond, VA 23231
Phone: (804) 226-7812
Fax: (804) 226-7816

INTERNATIONAL

Samiul Haque
Phone: (502) 955-6035 Ext: 1494
Cell Phone: (502) 489-0141
Email: shaque@wittrans.com

© 2017 Whatever It Takes Transmission Parts. Inc.

WHATEVER IT TAKES
TRANSMISSION PARTS, INC

Quality & Service Only an Employee-Owned Company can Give.

WHATEVER IT TAKES is not just our name, It's our Mission.
Our Underlying goal has always been to serve the transmission industry. The Nissan CVT transmission makes up nearly 25 percent of the transmissions in the market today. Many repair shops were burned trying to repair early model CVT's in the Saturn and are reluctant to work on the Nissan CVT today. WIT is doing our best to change that. We have assembled a team with a wealth of knowledge about the workings of the Nissan CVT units. We have compiled this Technical Manual to aid in the identification of the CVT units as well as the inner workings of the various Nissan CVT transmissions. Our goal is to empower you with the knowledge, reference materials and technical support to build these transmissions instead of buying the expensive units from a dealer and improving your profit margins.

Disclaimer

The information in this catalog has been obtained from sources deemed reliable and has been checked for accuracy. However, no liability can be assumed for any incomplete or incorrect data.Please check manufacturer documentation including service and owner's manuals for more information.

Copyright

No part of this publication may be reproduced, stored in a retrieval system, transmitted in any form, by any means; electronic, mechanical, photocopying, recording or otherwise, without prior written permission of Whatever It Takes Transmission Parts, Inc.

Text and Illustrations copyright Whatever It Takes Transmission Parts, Inc (WIT)

TABLE OF CONTENTS

Transmission Identification & Tag Location 6-7
Nissan / Infinity Identification Chart 8-10
Chevy/Dodge/Jeep/Mitsubishi/Suzuki Identification Chart 11-13
Whatever It Takes CVT Overhauls, Kits, Filters, Modules Part Number Listing 15

RE0F08A / RE0F08B Diagnostic Trouble Codes 16-17
RE0F08A Exploded Transmission View 18-19
RE0F08B Exploded Transmission View 20-21
RE0F08A / RE0F08B Pump Assembly 22
RE0F08A / RE0F08B Valve Body Solenoid Identification 23
RE0F08A / RE0F08B Valve Body Exploded View 24-27
RE0F08A Primary & Secondary Pulley Exploded View 28-29
RE0F08B Primary & Secondary Pulley Exploded View 30-31

RE0F09A / RE0F09B Diagnostic Trouble Codes 32-33
RE0F09A / RE0F09B Exploded Transmission View 34-35
RE0F09A / RE0F09B Pump Assembly 36
RE0F09A / RE0F09B Valve Body Solenoid Identification 37
RE0F09A / RE0F09B Valve Body Exploded View 38-41
RE0F09A / RE0F09B Primary & Secondary Pulley Exploded View 42-43

RE0F10A / RE0F10B Diagnostic Trouble Codes 44-45
RE0F10A Exploded Transmission View 46-47
RE0F10A Pump Assembly 48
RE0F10A Pump Drive Sprocket 49-51
RE0F10A Valve Body Solenoid Identification 53
RE0F10A Valve Body Exploded View 54-55
RE0F10A Primary & Secondary Pulley Exploded View 57

RE0F10D Diagnostic Trouble Codes 59
RE0F10D Exploded Transmission View 60-61
RE0F10D Pump Assembly 62
RE0F10D Valve Body Solenoid Identification 63
RE0F10D Valve Body Exploded View 64-65
RE0F10D Primary & Secondary Exploded View 66-67
RE0F10D Reverse Piston 68

RE0F10E Diagnostic Trouble Codes 69
RE0F10E Exploded Transmission View 70-71
RE0F10E Pump Assembly 72
RE0F10E Valve Body Solenoid Identification 73
RE0F10E Valve Body Exploded View 74-75
RE0F10E Primary & Secondary Pulley Exploded View 76-77
RE0F10E Reverse Piston 78

© 2017 Whatever It Takes Transmission Parts. Inc.

TABLE OF CONTENTS

RE0F11A Diagnostic Trouble Codes 79
RE0F11A Exploded Transmission View 80-81
RE0F11A Pump Assembly 82
RE0F11A Valve Body Solenoid Identification 83
RE0F11A Exploded Valve Body View 84-85
RE0F11A Primary & Secondary Pulley Exploded View 86-87

RE0F02H / RE0F10J Diagnostic Trouble Codes 88-89

CVT Tools & Testers 90-91

TEARDOWN & ASSEMBLY PROCEDURES

RE0F08A / F08B / F09A / F09B Secondary & Primary Pulley 92-104

RE0F10A / B / D / E Secondary Pulley 106-111
RE0F10A / B / D / E Primary Pulley 112-114

RE0F10A / B / D / E Belt Inspection 115
RE0F10A / B / D / E Belt And Rear Cover Installation 116-118

CVT Belt Differences 119
RE0F10A / B Speed Sensors 120
RE0F10D / E / H / J Speed Sensors 121
CVT Transmission Cooler Flush Procedure 122-126
Coolers , Fittings, Accessories 127

© 2017 Whatever It Takes Transmission Parts. Inc.

1-800-940-0197

Building Partnerships that Matter

WIT WHATEVER IT TAKES
TRANSMISSION PARTS, INC

"When you have great partners like we do, it's like being on a team. We share the same goals, and if one of us has a victory we all have a victory no matter the size. It's truly a wonderful collaboration that is on the road for success!"
- Steve Hinderer, WIT Performance

Your success is our success.

When we partner up with a vendor we look for a vendor that we can build a relationship with and grow as one. We look for partners that work with us not only in the good times but hard times as well. The true Partnerships take hard work, honesty, dedication, loyalty, devotion and many other things that really are not used anymore in the fast paced world that we live in. Most people are far too busy to slow down and take the steps necessary to ensure that these types of relationships are built. That in itself is a recipe for failure.

Because I am from the "old school", I still have a strong belief that human interaction at its core still provides the most positive outcome. Although the world is going faster than ever, people still do long for the days of interacting with their vendors on a personal level and engaging in "True Partnerships". True partnerships are accomplished with good old fashioned hard work and dedication to one another.

Remember success is never owned, it's rented and the rent is due every day.

- Rodney Peters, WIT President

www.wittrans.com | 800.940.0197

NISSAN CVT TRANSMISSION CASE IDENTIFICATION

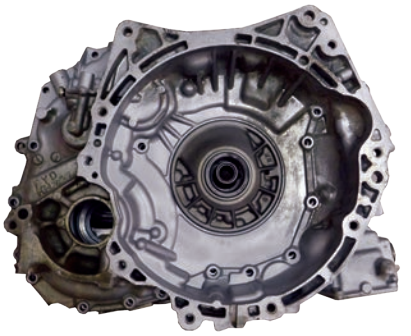

RE0F08A/B (1.8L)

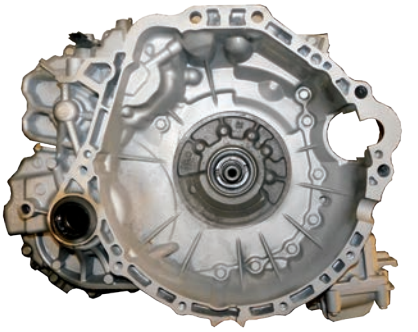

RE0F09A/B (2WD)

RE0F09A/B (4 x 4)

RE0F10A (2.5L)

RE0F10A (2.0L)

RE0F10D (2.5L)

RE0F10E/H/J (3.5L)

RE0F11A (1.8L)

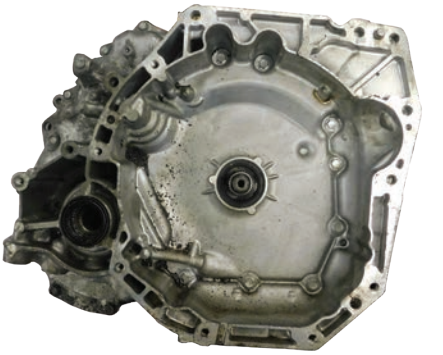

RE0F11A (1.5L)

© 2017 Whatever It Takes Transmission Parts. Inc.

1-800-940-0197

NISSAN CVT TRANSMISSION ID TAG LOCATION

The ID Tag on most units can be found on a sticker glued to the transmission Range Sensor (Figure 1A). It can also be found stamped on the Bell Housing where the Case and Bell Housing meet (Figure 1B).

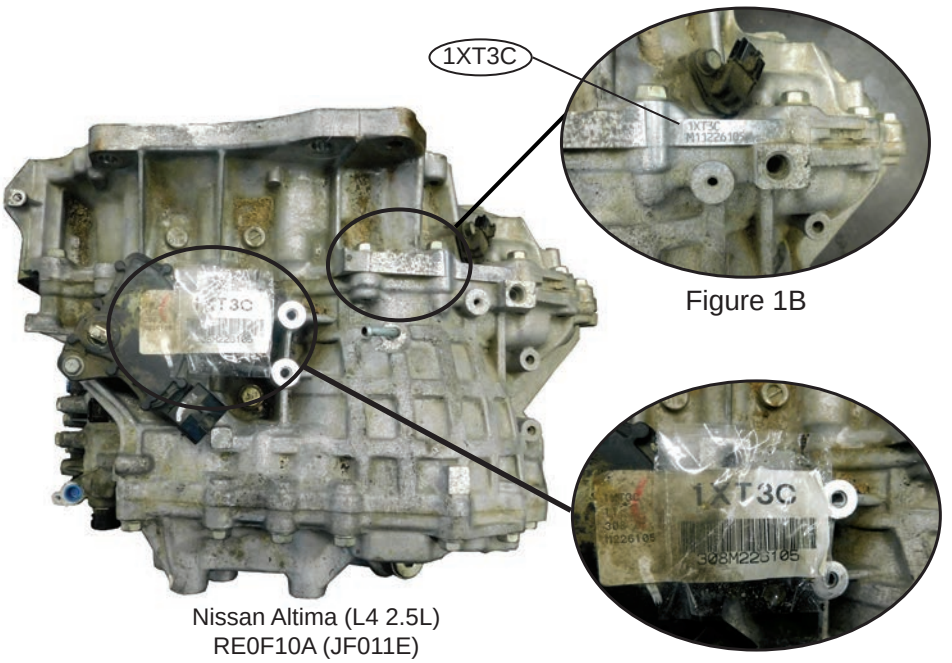

Figure 1B

Nissan Altima (L4 2.5L)
RE0F10A (JF011E)

Figure 1A

The ID Tag on the RE0F11A (JF015E) is stamped on the rear of the Case where the Case and the Rear Cover meet (Figure 2A). It can also be found on a sticker glued to the Rear Cover (Figure 2B).

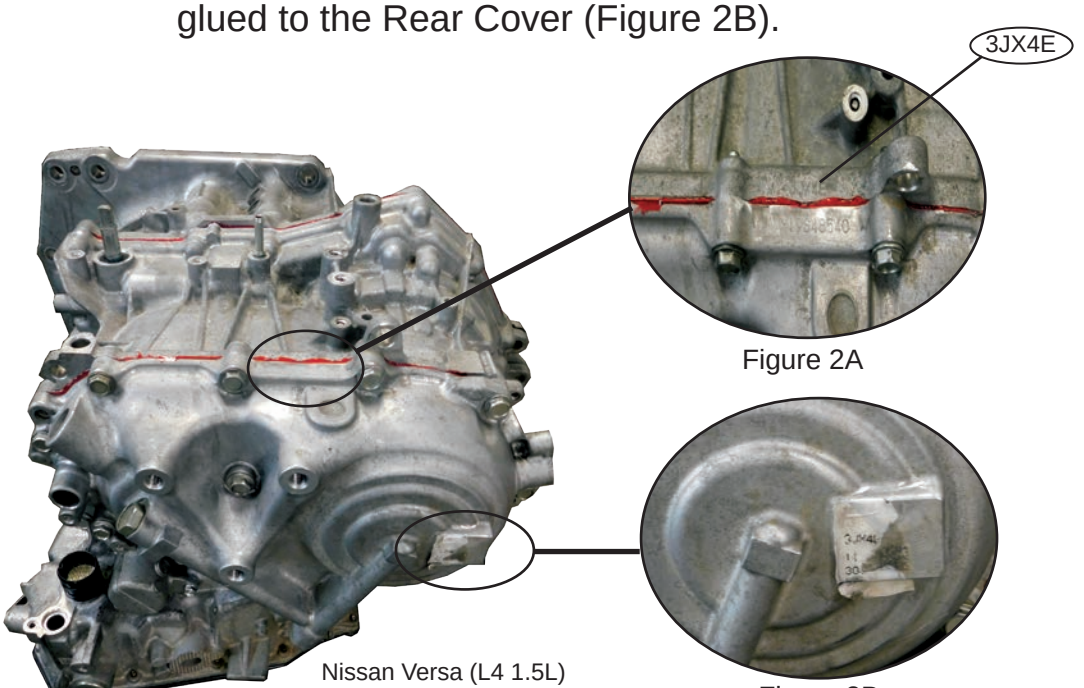

Figure 2A

Figure 2B

Nissan Versa (L4 1.5L)
RE0F11A (JF015E)

© 2017 Whatever It Takes Transmission Parts. Inc.

Nissan CVT Identification Chart

Make	Model	Year	Code	Axle	Engine	FD Ratio	Transmission	
Nissan	Altima	2007-08	1XE0A	2WD	V6 3.5L	5.173	RE0F09B (JF010E)	CVT3
Nissan	Altima	2007-08	1XF5A	2WD	L4 2.5L	5.798	RE0F10A (JF011E)	CVT2
Nissan	Altima	2009	1XT6B	2WD	L4 2.5L	5.798	RE0F10A (JF011E)	CVT2
Nissan	Altima	2009	1XT6D	2WD	L4 2.5L	5.798	RE0F10A (JF011E)	CVT2
Nissan	Altima	2009-11	1XE1B	2WD	V6 3.5L	5.173	RE0F09B (JF010E)	CVT3
Nissan	Altima	2009-11	1XE2B	2WD	V6 3.5L	5.173	RE0F09B (JF010E)	CVT3
Nissan	Altima	2010-12	1XT3C	2WD	L4 2.5L	5.122	RE0F10A (JF011E)	CVT2
Nissan	Altima	2010-12	1XT3D	2WD	L4 2.5L	5.122	RE0F10A (JF011E)	CVT2
Nissan	Altima	2010-12	1XF3C	2WD	L4 2.5L	5.122	RE0F10A (JF011E)	CVT2
Nissan	Altima	2011-12	1XE0E	2WD	V6 3.5L	4.878	RE0F09B (JF010E)	CVT3
Nissan	Altima	2011-12	1XE3C	2WD	V6 3.5L	4.878	RE0F09B (JF010E)	CVT3
Nissan	Altima	2011-12	1XF3C	2WD	L4 2.5L	5.798	RE0F10A (JF011E)	CVT2
Nissan	Altima	2012	1XE3D	2WD	V6 3.5L	5.173	RE0F09B (JF010E)	CVT3
Nissan	Altima	2013	1XT3C	2WD	L4 2.5L	5.122	RE0F10A (JF011E)	CVT2
Nissan	Altima	2013	1XT3D	2WD	L4 2.5L	5.122	RE0F10A (JF011E)	CVT2
Nissan	Altima	2013	3VX0A	2WD	L4 2.5L	4.828	RE0F10D (JF016E)	CVT8
Nissan	Altima	2013	3WX0A	2WD	V6 3.5L	4.677	RE0F10E (JF017E)	CVT8
Nissan	Altima	2014	3WX0A	2WD	V6 3.5L	4.677	RE0F10E (JF017E)	CVT8
Nissan	Altima	2014	3VX0A	2WD	L4 2.5L	4.828	RE0F10D (JF016E)	CVT8
Nissan	Altima	2014-16	3VX0C	2WD	L4 2.5L	4.828	RE0F10D (JF016E)	CVT8
Nissan	Altima	2015-16	3WX1D	2WD	V6 3.5L	4.602	RE0F10H (JF018E)	CVT8
Nissan	Cube	2009-10	1XC6B	2WD	L4 1.8L	5.473	RE0F08B (JF009E)	CVT1
Nissan	Cube	2011-14	1XC6B	2WD	L4 1.8L	5.473	RE0F08B (JF009E)	CVT1
Nissan	Juke	2011-13	3TX0A	2WD	L4 1.6L (Turbo)	5.798	RE0F10B (JF011E)	CVT2
Nissan	Juke	2011-13	3TX0C	AWD	L4 1.6L (Turbo)	5.798	RE0F10B (JF011E)	CVT2
Nissan	Juke	2014		2WD	L4 1.6L (Turbo)	5.798	RE0F10B (JF011E)	CVT2
NIssan	Juke	2014		AWD	L4 1.6L (Turbo)	5.798	RE0F10B (JF011E)	CVT2
Nissan	Juke	2015-16	3TX0C	AWD	L4 1.6L (Turbo)	5.798	RE0F10B (JF011E)	CVT2
Nissan	Juke	2015-16	3XV4C	2WD	L4 1.6L (Turbo)	5.694	RE0F10B (JF011E)	CVT2
Nissan	Juke	2015-16	3XV4D	AWD	L4 1.6L (Turbo)	5.694	RE0F10B (JF011E)	CVT2
NIssan	Juke	2015-16	3XV6D	AWD	L4 1.6L (Turbo)	5.694	RE0F10B (JF011E)	CVT2
Nissan	Juke	2015-16		2WD	L4 1.6L (Turbo)	5.694	RE0F10D (JF016E)	CVT8
Nissan	Juke	2015-16		AWD	L4 1.6L (Turbo)	5.694	RE0F10D (JF016E)	CVT8
Nissan	Maxima	2007-08	1XE0A	2WD	V6 3.5L	5.173	RE0F09B (JF010E)	CVT3
Nissan	Maxima	2009-12	1XE0D	2WD	V6 3.5L	5.173	RE0F09B (JF010E)	CVT3
Nissan	Maxima	2009-12	1XE2A	2WD	V6 3.5L	5.173	RE0F09B (JF010E)	CVT3
Nissan	Maxima	2013-14	1XE3E	2WD	V6 3.5L	5.173	RE0F09B (JF010E)	CVT3
Nissan	Maxima	2016	3WX3B	2WD	V6 3.5L	5.250	RE0F10H (JF018E)	CVT8
Nissan	Murano	2003	1XD00	2WD	V6 3.5L	5.173	RE0F09A (JF010E)	CVT3
Nissan	Murano	2003	1XD01	AWD	V6 3.5L	5.173	RE0F09A (JF010E)	CVT3
Nissan	Murano	2004	1XD07	2WD	V6 3.5L	5.173	RE0F09A (JF010E)	CVT2
Nissan	Murano	2004	1XD08	AWD	V6 3.5L	5.173	RE0F09A (JF010E)	CVT3
Nissan	Murano	2004	1XD0A	4WD	V6 3.5L	5.173	RE0F09A (JF010E)	CVT3
Nissan	Murano	2004-06	1XD15	RWD	V6 3.5L	5.173	RE0F09A (JF010E)	CVT3
Nissan	Murano	2004-06	1XD16	AWD	V6 3.5L	5.173	RE0F09A (JF010E)	CVT3
Nissan	Murano	2007	1XD0E	2WD	V6 3.5L	5.173	RE0F09A (JF010E)	CVT3
Nissan	Murano	2007	1XD0D	AWD	V6 3.5L	5.173	RE0F09A (JF010E)	CVT3
Nissan	Murano	2009-10	1XE0A	2WD	V6 3.5L	5.173	RE0F09B (JF010E)	CVT3
Nissan	Murano	2009-10	1XE0B	AWD	V6 3.5L	5.173	RE0F09B (JF010E)	CVT3
Nissan	Murano	2011-14	1XE1B	2WD	V6 3.5L	5.173	RE0F09B (JF010E)	CVT3
Nissan	Murano	2011-14	1XE1C	AWD	V6 3.5L	5.173	RE0F09B (JF010E)	CVT3
Nissan	Murano	2014		2WD	V6 3.5L	5.173	RE0F09B (JF010E)	CVT3
Nissan	Murano	2014		AWD	V6 3.5L	5.173	RE0F09B (JF010E)	CVT3
Nissan	Murano	2015-16	3WX1E	FWD	V6 3.5L	4.677	RE0F10J (JF019E)	CVT8

© 2017 Whatever It Takes Transmission Parts. Inc.

1-800-940-0197

Nissan CVT Identification Chart

Make	Model	Year	Code	Axle	Engine	FD Ratio	Transmission	
Nissan	Murano	2015-16	3WX1E	4WD	V6 3.5L	4.677	RE0F10J (JF019E)	CVT8
Nissan	Murano (Hybrid)	2016					RE0F02H (JF018E)	CVT8
Nissan	NV200	2013	3UX9B	2WD	L4 2.0L	5.407	RE0F10A (JF011E)	CVT2
Nissan	NV200	2014-16		2WD	L4 2.0L	5.407	RE0F10A (JF011E)	CVT2
Nissan	NV200	2015-16		2WD	L4 2.0L	4.828	RE0F10D (JF016E)	CVT8
Nissan	Pathfinder	2013-14	3WX0B	2WD	V6 3.5L	5.577	RE0F10E (JF017E)	CVT8
Nissan	Pathfinder	2013-14	3WX0D	2WD	V6 3.5L	5.577	RE0F10E (JF017E)	CVT8
Nissan	Pathfinder	2013-14	3WX0C	4WD	V6 3.5L	5.577	RE0F10E (JF017E)	CVT8
Nissan	Pathfinder	2013-14	3WX0E	4WD	V6 3.5L	5.577	RE0F10E (JF017E)	CVT8
Nissan	Pathfinder	2015-16	3WX2D	2WD	V6 3.5L	5.250	RE0F10J (JF019E)	CVT8
Nissan	Pathfinder	2015-16	3WX2E	4WD	V6 3.5L	5.250	RE0F10J (JF019E)	CVT8
Nissan	Pathfinder (Hybrid)	2014-15		FWD	L4 2.5L (SC)	5.577	RE0F02H (JF018E)	CVT8
Nissan	Pathfinder (Hybrid)	2014-15		AWD	L4 2.5L (SC)	5.577	RE0F02H (JF018E)	CVT8
Nissan	Quest	2011-13	1XE2C	2WD	V6 3.5L	4.878	RE0F09B (JF010E)	CVT3
Nissan	Quest	2014		2WD	V6 3.5L	4.878	RE0F09B (JF010E)	CVT3
Nissan	Quest	2015	3WX3A	2WD	V6 3.5L	4.677	RE0F10J (JF019E)	CVT8
Nissan	Rogue	2008	1XF6C	2WD	L4 2.5L	6.120	RE0F10A (JF011E)	CVT2
Nissan	Rogue	2008	1XF6D	2WD	L4 2.5L	6.120	RE0F10A (JF011E)	CVT2
Nissan	Rogue	2008	1XF9C	2WD	L4 2.5L	6.120	RE0F10A (JF011E)	CVT2
Nissan	Rogue	2008	1XF9E	2WD	L4 2.5L	6.120	RE0F10A (JF011E)	CVT2
Nissan	Rogue	2008	1XF9D	2WD	L4 2.5L	6.120	RE0F10A (JF011E)	CVT2
Nissan	Rogue	2008	1XF4A	AWD	L4 2.5L	6.120	RE0F10A (JF011E)	CVT2
Nissan	Rogue	2008	1ZF4B	AWD	L4 2.5L	6.120	RE0F10A (JF011E)	CVT2
Nissan	Rogue	2008	1ZF6E	AWD	L4 2.5L	6.120	RE0F10A (JF011E)	CVT2
Nissan	Rogue	2008	1XF7A	AWD	L4 2.5L	6.120	RE0F10A (JF011E)	CVT2
Nissan	Rogue	2009	1XT4D	2WD	L4 2.5L	6.120	RE0F10A (JF011E)	CVT2
Nissan	Rogue	2009	1XT4E	2WD	L4 2.5L	6.120	RE0F10A (JF011E)	CVT2
Nissan	Rogue	2009	1XT5A	2WD	L4 2.5L	6.120	RE0F10A (JF011E)	CVT2
Nissan	Rogue	2009	1XT5B	2WD	L4 2.5L	6.120	RE0F10A (JF011E)	CVT2
Nissan	Rogue	2009	1XT9E	2WD	L4 2.5L	6.120	RE0F10A (JF011E)	CVT2
Nissan	Rogue	2009	1XT5C	AWD	L4 2.5L	6.120	RE0F10A (JF011E)	CVT2
Nissan	Rogue	2009	1XT5D	AWD	L4 2.5L	6.120	RE0F10A (JF011E)	CVT2
Nissan	Rogue	2009	1XT5E	AWD	L4 2.5L	6.120	RE0F10A (JF011E)	CVT2
Nissan	Rogue	2009	1XT6A	AWD	L4 2.5L	6.120	RE0F10A (JF011E)	CVT2
Nissan	Rogue	2010	1XT7E	2WD	L4 2.5L	6.120	RE0F10A (JF011E)	CVT2
Nissan	Rogue	2010	1XT8A	2WD	L4 2.5L	6.120	RE0F10A (JF011E)	CVT2
Nissan	Rogue	2010	1XT8B	2WD	L4 2.5L	6.120	RE0F10A (JF011E)	CVT2
Nissan	Rogue	2010	1XT8C	2WD	L4 2.5L	6.120	RE0F10A (JF011E)	CVT2
Nissan	Rogue	2010	1XT3B	AWD	L4 2.5L	6.120	RE0F10A (JF011E)	CVT2
Nissan	Rogue	2010	1XT9C	AWD	L4 2.5L	6.120	RE0F10A (JF011E)	CVT2
Nissan	Rogue	2010	1XT9D	AWD	L4 2.5L	6.120	RE0F10A (JF011E)	CVT2
Nissan	Rogue	2010	1XT9E	AWD	L4 2.5L	6.120	RE0F10A (JF011E)	CVT2
Nissan	Rogue	2011	3UX3B	2WD	L4 2.5L	5.798	RE0F10A (JF011E)	CVT2
Nissan	Rogue	2011	3UX3C	2WD	L4 2.5L	5.798	RE0F10A (JF011E)	CVT2
Nissan	Rogue	2011	3UX3D	2WD	L4 2.5L	5.798	RE0F10A (JF011E)	CVT2
Nissan	Rogue	2011	3UX4C	2WD	L4 2.5L	5.798	RE0F10A (JF011E)	CVT2
Nissan	Rogue	2011	3UX3E	AWD	L4 2.5L	5.798	RE0F10A (JF011E)	CVT2
Nissan	Rogue	2011	3UX4A	AWD	L4 2.5L	5.798	RE0F10A (JF011E)	CVT2
Nissan	Rogue	2011	3UX4B	AWD	L4 2.5L	5.798	RE0F10A (JF011E)	CVT2
Nissan	Rogue	2011	3UX4D	AWD	L4 2.5L	5.798	RE0F10A (JF011E)	CVT2
Nissan	Rogue	2012-13	3UX3B	2WD	L4 2.5L	5.798	RE0F10A (JF011E)	CVT2
Nissan	Rogue	2012-13	3UX3D	2WD	L4 2.5L	5.798	RE0F10A (JF011E)	CVT2
Nissan	Rogue	2012-13	3UX3E	AWD	L4 2.5L	5.798	RE0F10A (JF011E)	CVT2
Nissan	Rogue	2012-13	3UX4B	AWD	L4 2.5L	5.798	RE0F10A (JF011E)	CVT2

© 2017 Whatever It Takes Transmission Parts. Inc.

Nissan CVT Identification Chart

Make	Model	Year	Code	Axle	Engine	FD Ratio	Transmission	
Nissan	Rogue	2014-15	3VX1C	FWD	L4 2.5L	6.386	RE0F10D (JF016E)	CVT8
Nissan	Rogue	2014-15	3VX1C	AWD	L4 2.5L	6.386	RE0F10D (JF016E)	CVT8
Nissan	Rogue	2016		FWD	L4 2.5L	6.386	RE0F10D (JF016E)	CVT8
Nissan	Rogue	2016		AWD	L4 2.5L	6.386	RE0F10D (JF016E)	CVT8
Nissan	Sentra	2007-08	1XF04	2WD	L4 2.0L	5.407	RE0F10A (JF011E)	CVT2
Nissan	Sentra	2007-08	1XF5B	2WD	L4 2.5L	5.407	RE0F10A (JF011E)	CVT2
Nissan	Sentra	2009	1XT1E		L4 2.0L	5.407	RE0F10A (JF011E)	CVT2
Nissan	Sentra	2009	1XT4C		L4 2.5L	5.407	RE0F10A (JF011E)	CVT2
Nissan	Sentra	2010-12	3UX0C		L4 2.0L	5.122	RE0F10A (JF011E)	CVT2
Nissan	Sentra	2010-12	1XT7A		L4 2.5L	5.407	RE0F10A (JF011E)	CVT2
Nissan	Sentra	2013-14	X427A	2WD	L4 1.8L	3.882	RE0F11A (JF015E)	CVT7
Nissan	Sentra	2015-16	X427E	2WD	L4 1.8L	3.882	RE0F11A (JF015E)	CVT7
Nissan	Versa	2007-09	1XB6B		L4 1.8L	5.473	RE0F08A (JF009E)	CVT1
Nissan	Versa	2009-11	1XC6C		L4 1.8L	5.473	RE0F08B (JF009E)	CVT1
Nissan	Versa	2011-12	1XC6B		L4 1.8L	5.473	RE0F08B (JF009E)	CVT1
Nissan	Versa	2012	3JX4E	2WD	L4 1.5L	3.882	RE0F11A (JF015E)	CVT7
Nissan	Versa	2013	3JX6C	2WD	L4 1.5L	3.882	RE0F11A (JF015E)	CVT7
Nissan	Versa	2014-16	3JX6C	2WD	L4 1.5L	3.882	RE0F12A (JF020E)	CVT7

Notes: There is no listing in the United States for a 2015 Maxima. The year model changes from 2014 to 2016.
There is also no listing for the 2008 Murano. The year model changes from 2007 to 2009.

Make	Model	Year	Code	Axle	Engine	FD Ratio	Transmission	
Infinity	JX35	2013	1XE1B	2WD	V6 3.5L	5.173	RE0F09B (JF010E)	CVT3
Infinity	JX35	2013	1XE1C	AWD	V6 3.5L	5.173	RE0F09B (JF010E)	CVT3
Infinity	QX60	2014-15	3WX0B	FWD	V6 3.5L	5.577	RE0F10E (JF017E)	CVT8
Infinity	QX60	2014-15	3WX0D	FWD	V6 3.5L	5.577	RE0F10E (JF017E)	CVT8
Infinity	QX60	2014-15	3WX0C	AWD	V6 3.5L	5.577	RE0F10E (JF017E)	CVT8
Infinity	QX60	2014-15	3WX0E	AWD	V6 3.5L	5.577	RE0F10E (JF017E)	CVT8
Infinity	QX60	2015-16	3WX2D	FWD	V6 3.5L	5.250	RE0F10J (JF019E)	CVT8
Infinity	QX60	2015-16	3WX2E	AWD	V6 3.5L	5.250	RE0F10J (JF019E)	CVT8
Infinity	QX60 (Hybrid)	2014		FWD	L4 2.5L (SC)	5.846	RE0F02H (JF018E)	CVT8
Infinity	QX60 (Hybrid)	2014		AWD	L4 2.5L (SC)	5.846	RE0F02H (JF018E)	CVT8
Infinity	QX60 (Hybrid)	2015-16					RE0F02H (JF018E)	CVT8
Infinity	QX70	2014	3WX0B	FWD	V6 3.5L	5.577	RE0F10E (JF017E)	CVT8
Infinity	QX70	2014	3WX0D	FWD	V6 3.5L	5.577	RE0F10E (JF017E)	CVT8
Infinity	QX70	2014	3WX0C	AWD	V6 3.5L	5.577	RE0F10E (JF017E)	CVT8
Infinity	QX70	2014	3WX0E	AWD	V6 3.5L	5.577	RE0F10E (JF017E)	CVT8

© 2017 Whatever It Takes Transmission Parts. Inc.

1-800-940-0197

Jatco Non-Nissan CVT Identification Chart

Jeep & Chrysler Codes By Jatco Code

1XH00	1XH02	1XH01	1XH0D
4872676AC	68000750AC	4872840AE	R8000840AI
68000676AC	68000750AD	4872840AF	4872840AI
68000676AE	68000750AF		
68000676AH	68000750AG		
	68000840AC		
	68000840AE		
	68000840AF		

Make	Model	Year	Code	Axle	Engine	Transmission
Chevy	City Express	2015		2WD	L4 2.0L	RE0F10D (JF016E)
Chevy	City Express	2016		2WD	L4 2.0L	RE0F10D (JF016E)
Chevy	City Express	2017		2WD	L4 2.0L	RE0F10D (JF016E)

Make	Model	Year	Code	Axle	Engine	Transmission		Chrysler Code
Dodge	Caliber	2007	1XH00	2WD	L4 2.0L	RE0F10A (JF011E)	CVT2	See Chart
Dodge	Caliber	2008	1XH00	2WD	L4 2.0L	RE0F10A (JF011E)	CVT2	See Chart
Dodge	Caliber	2009	1XH00	2WD	L4 2.0L	RE0F10A (JF011E)	CVT2	See Chart
Dodge	Caliber	2010	1XH00	2WD	L4 2.0L	RE0F10A (JF011E)	CVT2	See Chart
Dodge	Caliber	2011	1XH00	2WD	L4 2.0L	RE0F10A (JF011E)	CVT2	See Chart
Dodge	Caliber	2012	1XH00	2WD	L4 2.0L	RE0F10A (JF011E)	CVT2	See Chart
Dodge	Caliber	2007	1XH02	2WD	L4 2.4L	RE0F10A (JF011E)	CVT2	See Chart
Dodge	Caliber	2007	1XH01	AWD	L4 2.4L	RE0F10A (JF011E)	CVT2	See Chart
Dodge	Caliber	2008	1XH02	2WD	L4 2.4L	RE0F10A (JF011E)	CVT2	See Chart
Dodge	Caliber	2008	1XH01	AWD	L4 2.4L	RE0F10A (JF011E)	CVT2	See Chart
Dodge	Caliber	2009	1XH02	2WD	L4 2.4L	RE0F10A (JF011E)	CVT2	See Chart
Dodge	Caliber	2009	1XH01	AWD	L4 2.4L	RE0F10A (JF011E)	CVT2	See Chart
Dodge	Caliber	2010	1XH02	2WD	L4 2.4L	RE0F10A (JF011E)	CVT2	See Chart
Dodge	Caliber	2011	1XH02	2WD	L4 2.4L	RE0F10A (JF011E)	CVT2	See Chart
Jeep	Compass	2007	1XH00	2WD	L4 2.0L	RE0F10A (JF011E)	CVT2	See Chart
Jeep	Compass	2008	1XH00	2WD	L4 2.0L	RE0F10A (JF011E)	CVT2	See Chart
Jeep	Compass	2009	1XH00	2WD	L4 2.0L	RE0F10A (JF011E)	CVT2	See Chart
Jeep	Compass	2010	1XH00	2WD	L4 2.0L	RE0F10A (JF011E)	CVT2	See Chart
Jeep	Compass	2011	1XH00	2WD	L4 2.0L	RE0F10A (JF011E)	CVT2	See Chart
Jeep	Compass	2012	1XH00	2WD	L4 2.0L	RE0F10A (JF011E)	CVT2	See Chart
Jeep	Compass	2013	1XH00	2WD	L4 2.0L	RE0F10A (JF011E)	CVT2	See Chart
Jeep	Compass	2014	1XH00	2WD	L4 2.0L	RE0F10A (JF011E)	CVT2	See Chart
Jeep	Compass	2015	1XH00	2WD	L4 2.0L	RE0F10A (JF011E)	CVT2	See Chart
Jeep	Compass	2016	1XH00	2WD	L4 2.0L	RE0F10A (JF011E)	CVT2	See Chart
Jeep	Compass	2017	1XH00	2WD	L4 2.0L	RE0F10A (JF011E)	CVT2	See Chart
Jeep	Compass	2007	1XH02	2WD	L4 2.4L	RE0F10A (JF011E)	CVT2	See Chart
Jeep	Compass	2007	1XH01	AWD	L4 2.4L	RE0F09A (JF010E)	CVT3	See Chart
Jeep	Compass	2008	1XH02	2WD	L4 2.4L	RE0F10A (JF011E)	CVT2	See Chart
Jeep	Compass	2008	1XH01	AWD	L4 2.4L	RE0F09A (JF010E)	CVT3	See Chart
Jeep	Compass	2009	1XH02	2WD	L4 2.4L	RE0F10A (JF011E)	CVT2	See Chart
Jeep	Compass	2009	1XH01	AWD	L4 2.4L	RE0F09A (JF010E)	CVT3	See Chart
Jeep	Compass	2010	1XH02	2WD	L4 2.4L	RE0F10A (JF011E)	CVT2	See Chart
Jeep	Compass	2010	1XH01	AWD	L4 2.4L	RE0F10A (JF011E)	CVT2	See Chart
Jeep	Compass	2011	1XH02	2WD	L4 2.4L	RE0F10A (JF011E)	CVT2	See Chart
Jeep	Compass	2011	1XH0D	AWD	L4 2.4L	RE0F10A (JF011E)	CVT2	See Chart
Jeep	Compass	2012	1XH02	2WD	L4 2.4L	RE0F10A (JF011E)	CVT2	See Chart

© 2017 Whatever It Takes Transmission Parts. Inc.

Jatco Non-Nissan CVT Identification Chart

Make	Model	Year	Code	Axle	Engine	Transmission		Chrysler Code
Jeep	Compass	2012	1XHOD	AWD	L4 2.4L	RE0F10A (JF011E)	CVT2	See Chart
Jeep	Compass	2013	1XH02	2WD	L4 2.4L	RE0F10A (JF011E)	CVT2	See Chart
Jeep	Compass	2013	1XH0D	AWD	L4 2.4L	RE0F10A (JF011E)	CVT2	See Chart
Jeep	Compass	2014	1XH0D	AWD	L4 2.4L	RE0F10A (JF011E)	CVT2	See Chart
Jeep	Compass	2015	1XH0D	AWD	L4 2.4L	RE0F10A (JF011E)	CVT2	See Chart
Jeep	Compass	2016	1XH0D	AWD	L4 2.4L	RE0F10A (JF011E)	CVT2	See Chart
Jeep	Compass	2017	1XH0D	AWD	L4 2.4L	RE0F10A (JF011E)	CVT2	See Chart
Jeep	Patriot	2007	1XH00	2WD	L4 2.0L	RE0F10A (JF011E)	CVT2	See Chart
Jeep	Patriot	2008	1XH00	2WD	L4 2.0L	RE0F10A (JF011E)	CVT2	See Chart
Jeep	Patriot	2009	1XH00	2WD	L4 2.0L	RE0F10A (JF011E)	CVT2	See Chart
Jeep	Patriot	2010	1XH00	2WD	L4 2.0L	RE0F10A (JF011E)	CVT2	See Chart
Jeep	Patriot	2011	1XH00	2WD	L4 2.0L	RE0F10A (JF011E)	CVT2	See Chart
Jeep	Patriot	2012	1XH00	2WD	L4 2.0L	RE0F10A (JF011E)	CVT2	See Chart
Jeep	Patriot	2013	1XH00	2WD	L4 2.0L	RE0F10A (JF011E)	CVT2	See Chart
Jeep	Patriot	2015	1XH00	2WD	L4 2.0L	RE0F10A (JF011E)	CVT2	See Chart
Jeep	Patriot	2016	1XH00	2WD	L4 2.0L	RE0F10A (JF011E)	CVT2	See Chart
Jeep	Patriot	2017	1XH00	2WD	L4 2.0L	RE0F10A (JF011E)	CVT2	See Chart
Jeep	Patriot	2007	1XH02	2WD	L4 2.4L	RE0F10A (JF011E)	CVT2	See Chart
Jeep	Patriot	2007	1XH01	AWD	L4 2.4L	RE0F09A (JF010E)	CVT3	See Chart
Jeep	Patriot	2008	1XH02	2WD	L4 2.4L	RE0F10A (JF011E)	CVT2	See Chart
Jeep	Patriot	2008	1XH01	AWD	L4 2.4L	RE0F09A (JF010E)	CVT3	See Chart
Jeep	Patriot	2009	1XH02	2WD	L4 2.4L	RE0F10A (JF011E)	CVT2	See Chart
Jeep	Patriot	2009	1XH01	AWD	L4 2.4L	RE0F09A (JF010E)	CVT3	See Chart
Jeep	Patriot	2010	1XH02	2WD	L4 2.4L	RE0F10A (JF011E)	CVT2	See Chart
Jeep	Patriot	2010	1XH01	AWD	L4 2.4L	RE0F09A (JF010E)	CVT3	See Chart
Jeep	Patriot	2011	1XH02	2WD	L4 2.4L	RE0F10A (JF011E)	CVT2	See Chart
Jeep	Patriot	2011	1XH0D	AWD	L4 2.4L	RE0F09A (JF010E)	CVT3	See Chart
Jeep	Patriot	2012	1XH02	2WD	L4 2.4L	RE0F10A (JF011E)	CVT2	See Chart
Jeep	Patriot	2012	1XH0D	AWD	L4 2.4L	RE0F10A (JF011E)	CVT2	See Chart
Jeep	Patriot	2013	1XH02	2WD	L4 2.4L	RE0F10A (JF011E)	CVT2	See Chart
Jeep	Patriot	2013	1XH0D	AWD	L4 2.4L	RE0F10A (JF011E)	CVT2	See Chart
Jeep	Patriot	2014	1XH0D	AWD	L4 2.4L	RE0F10A (JF011E)	CVT2	See Chart
Jeep	Patriot	2015	1XH0D	AWD	L4 2.4L	RE0F10A (JF011E)	CVT2	See Chart
Jeep	Patriot	2016	1XH0D	AWD	L4 2.4L	RE0F10A (JF011E)	CVT2	See Chart
Jeep	Patriot	2017	1XH0D	AWD	L4 2.4L	RE0F10A (JF011E)	CVT2	See Chart

Make	Model	Year	Code	Axle	Engine	Transmission	
Mitsubishi	Lancer	2008		2WD	L4 2.0L	RE0F10A (JF011E)	F1CJA
Mitsubishi	Lancer	2009		2WD	L4 2.0L, 2.4L	RE0F10A (JF011E)	F1CJA
Mitsubishi	Lancer	2010		2WD	L4 2.4L	RE0F10A (JF011E)	F1CJA
Mitsubishi	Lancer	2011		2WD	L4 2.0L, 2.4L	RE0F10A (JF011E)	F1CJA
Mitsubishi	Lancer	2012		2WD	L4 2.4L	RE0F10A (JF011E)	F1CJA
Mitsubishi	Lancer	2012		AWD	L4 2.4L	RE0F10A (JF011E)	W1CJA
Mitsubishi	Lancer	2013		2WD	L4 2.4L	RE0F10A (JF011E)	F1CJA
Mitsubishi	Lancer	2013		AWD	L4 2.4L	RE0F10A (JF011E)	W1CJA
Mitsubishi	Lancer	2014		2WD	L4 2.0L, 2.4L	RE0F10A (JF011E)	F1CJA
Mitsubishi	Lancer	2014		AWD	L4 2.4L	RE0F10A (JF011E)	W1CJA
Mitsubishi	Lancer	2015		2WD	L4 2.0L, 2.4L	RE0F10A (JF011E)	F1CJA
Mitsubishi	Lancer	2015		AWD	L4 2.4L	RE0F10A (JF011E)	W1CJA
Mitsubishi	Lancer	2016		2WD	L4 2.0L, 2.4L	RE0F10A (JF011E)	F1CJA
Mitsubishi	Lancer	2016		AWD	L4 2.4L	RE0F10A (JF011E)	W1CJA
Mitsubishi	Lancer	2017		2WD	L4 2.0L	RE0F10A (JF011E)	F1CJA
Mitsubishi	Lancer	2017		AWD	L4 2.4L	RE0F10A (JF011E)	W1CJA

© 2017 Whatever It Takes Transmission Parts. Inc.

1-800-940-0197

Jatco Non-Nissan CVT Identification Chart

Make	Model	Year	Code	Axle	Engine	Transmission	
Mitsubishi	Mirage	2015		2WD	L3 1.2L	RE0F11A (JF015E)	F1CJB
Mitsubishi	Mirage	2016		2WD	L3 1.2L	RE0F11A (JF015E)	F1CJB
Mitsubishi	Mirage	2017		2WD	L3 1.2L	RE0F11A (JF015E)	F1CJB
Mitsubishi	Outlander	2008		2WD	L4 2.4L	RE0F10A (JF011E)	F1CJA
Mitsubishi	Outlander	2008		AWD	L4 2.4L	RE0F10A (JF011E)	W1CJA
Mitsubishi	Outlander	2009		2WD	L4 2.4L	RE0F10A (JF011E)	F1CJA
Mitsubishi	Outlander	2009		AWD	L4 2.4L	RE0F10A (JF011E)	W1CJA
Mitsubishi	Outlander	2010		2WD	L4 2.4L	RE0F10A (JF011E)	F1CJA
Mitsubishi	Outlander	2010		AWD	L4 2.4L	RE0F10A (JF011E)	W1CJA
Mitsubishi	Outlander	2011		2WD	L4 2.4L	RE0F10A (JF011E)	F1CJA
Mitsubishi	Outlander	2011		AWD	L4 2.4L	RE0F10A (JF011E)	W1CJA
Mitsubishi	Outlander	2012		2WD	L4 2.4L	RE0F10A (JF011E)	F1CJA
Mitsubishi	Outlander	2013		2WD	L4 2.4L	RE0F10A (JF011E)	F1CJA
Mitsubishi	Outlander	2015		2WD	L4 2.4L	RE0F10A (JF011E)	F1CJA
Mitsubishi	Outlander	2016		2WD	L4 2.4L	RE0F10A (JF011E)	F1CJA
Mitsubishi	Outlander	2017		2WD	L4 2.4L	RE0F10A (JF011E)	F1CJA
Mitsubishi	Outlander	2010		2WD	L4 2.0L	RE0F10A (JF011E)	F1CJA
Mitsubishi	Outlander	2010		AWD	L4 2.0L	RE0F10A (JF011E)	W1CJA
Mitsubishi	Outlander	2011		2WD	L4 2.0L	RE0F10A (JF011E)	F1CJA
Mitsubishi	Outlander	2011		AWD	L4 2.0L	RE0F10A (JF011E)	W1CJA
Mitsubishi	Outlander	2012		2WD	L4 2.0L	RE0F10A (JF011E)	F1CJA
Mitsubishi	Outlander	2013		2WD	L4 2.0L	RE0F10A (JF011E)	F1CJA
Mitsubishi	Outlander	2014		2WD	L4 2.0L	RE0F10A (JF011E)	F1CJA
Mitsubishi	Outlander	2015		2WD	L4 2.0L	RE0F10A (JF011E)	F1CJA
Mitsubishi	Outlander	2016		2WD	L4 2.0L	RE0F10A (JF011E)	F1CJA
Mitsubishi	Outlander	2017		2WD	L4 2.0L	RE0F10A (JF011E)	F1CJA

Make	Model	Year	Code	Axle	Engine	Transmission
Suzuki	Kizashi	2010		2WD	L4 2.4L	RE0F10A (JF011E)
Suzuki	Kizashi	2010		AWD	L4 2.4L	RE0F10A (JF011E)
Suzuki	Kizashi	2011		2WD	L4 2.4L	RE0F10A (JF011E)
Suzuki	Kizashi	2011		AWD	L4 2.4L	RE0F10A (JF011E)
Suzuki	Kizashi	2012		2WD	L4 2.4L	RE0F10A (JF011E)
Suzuki	Kizashi	2012		AWD	L4 2.4L	RE0F10A (JF011E)
Suzuki	Kizashi	2013		2WD	L4 2.4L	RE0F10A (JF011E)
Suzuki	Kizashi	2013		AWD	L4 2.4L	RE0F10A (JF011E)
Suzuki	SX4	2009		2WD	L4 2.0L	RE0F10A (JF011E)
Suzuki	SX4	2009		AWD	L4 2.0L	RE0F10A (JF011E)
Suzuki	SX4	2010		2WD	L4 2.0L	RE0F10A (JF011E)
Suzuki	SX4	2010		AWD	L4 2.0L	RE0F10A (JF011E)
Suzuki	SX4	2011		2WD	L4 2.0L	RE0F10A (JF011E)
Suzuki	SX4	2011		AWD	L4 2.0L	RE0F10A (JF011E)
Suzuki	SX4	2012		2WD	L4 2.0L	RE0F10A (JF011E)
Suzuki	SX4	2012		AWD	L4 2.0L	RE0F10A (JF011E)
Suzuki	SX4	2013		2WD	L4 2.0L	RE0F10A (JF011E)
Suzuki	SX4	2013		AWD	L4 2.0L	RE0F10A (JF011E)

© 2017 Whatever It Takes Transmission Parts. Inc.

HEAVY DUTY AND HIGH PERF

ROADMASTER POWERTRAIN

"WE ADD YEARS TO YOUR GEARS"

REMANUFACTURED

TRANSMISSIONS

2 YEAR 24,000 MILE WARRANTY

AUTOMATIC, STANDARD, AND TRANSFER CASES
DOMESTIC AND FOREIGN APPLICATIONS
5-10 SPEEDS AND CVT'S
HEAVY DUTY AND PERFORMANCE UPGRADES
CUSTOM ENGINE AND TRANSMISSION PROGRAMMING

800.940.0197

WWW.WITTRANS.COM

Whatever It Takes carries top quality parts from leading manufacturers to fit all of your CVT needs. In addition to New and O.E. parts, we carry a full range of Remanufactured and Used Hard Parts. From the Torque Converter to the Rear Cover and everything in between. Call 800.940-0197 for a Sales Representative near you.

Transmission Name	Overhaul Kit	Master L/Steels	Master W/Steels	Internal Filter	External Filter	Friction Module	Steel Module	Pan Gasket	Piston Kit
RE0F08A (JF009E)	243002AF	243004AF	TBA	243010A	243013A	243119A	TBA	243300AF	N/A
RE0F08B (JF009E)	243002AF	243004AF	TBA	243010A	243013A	243119A	TBA	243300AF	N/A
RE0F09A (JF010E)	203002A	203004A	203006A	203010A	203013A	203119A	203139A	203300A	203960AHPK
RE0F09B (JF010E)	203002A	203004A	203006A	203010B	203013A	203119A	203139A	203300A	203960AHPK
RE0F10A (JF011E)	212002A	212004A	212006A	212010A / B	212013B	212119A	212139A	212300A / B	212960AHPK
RE0F10B (JF011E)	212002BF	212004BF	TBA	212010A	323013A	212119A	TBA	212300AW	333960AHPK
RE0F10D (JF016E)	333002AF	333004AF	TBA	333010A	333013A	212119A	TBA	212300BW	333960AHPK
RE0F10E (JF017E)	343002AF	343004AF	TBA	343010A / B	323013A	212119A	TBA	212300BW	333960AHPK
RE0F11A (JF015E)	323002A	323004AF	TBA	323010A	323013A	323119A	TBA	323300A	323960AHPK

All Valve Bodies come With Tested Solenoids and Lock-Up Control Valve Kit Installed

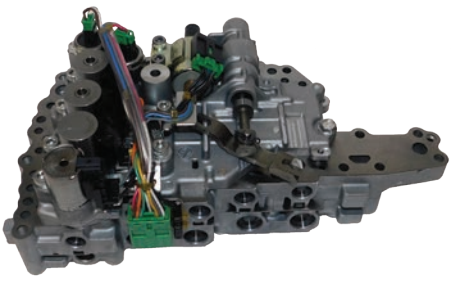

WIT Offers a line of used Rear Cover With Pulley Assemblies for Nissan CVT's

Ask your Sales Representative about our full line of Fluids, Additives and Assembly Lubricants.

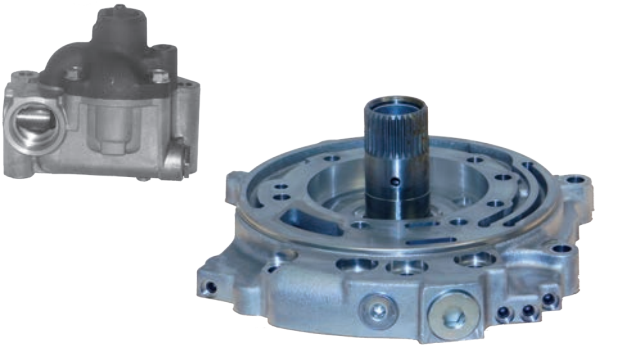

Pumps Come With Oversized Pump Flow Control Valve Already Installed.

© 2017 Whatever It Takes Transmission Parts. Inc.

RE0F08A Diagnostic Trouble Codes

DTC	Description
P0615	Starter Relay/Circuit
P0703	Brake Switch/Circuit
P0705	PNP Switch/Circuit
P0710	Automatic Transmission Fluid Temperature Sensor/Circuit
P0715	Input Speed Sensor/Circuit
P0720	Vehicle Speed Sensor/Circuit AT
P0725	Engine Speed Signal
P0730	Belt Damage
P0731	Automatic Transmission 1st Gear Function
P0732	Automatic Transmission 2nd Gear Function
P0733	Automatic Transmission 3rd Gear Function
P0740	Torque Converter Clutch Solenoid Circuit
P0744	Automatic Transmission TCC Solenoid/V Function
P0745	Line Pressure Solenoid/Circuit
P0746	Pressure Control Solenoid A Function
P0750	Shift Solenoid A /V
P0755	Shift Solenoid B /V
P0776	Pressure Control Solenoid B Function
P0778	Pressure Control Solenoid B Circuit
P0840	TR Pressure Sensor A Circuit
P0841	Pressure Sensor/Function
P0845	TR Pressure Sensor B Circuit
P0868	Secondary Pressure Down
P1701	TCM Power Supply
P1705	TP Sensor/Circuit Automatic Transmission
P1722	Estimated Vehicle Speed Signal
P1723	CVT Speed Sensor/Function
P1726	Electronic TH Control
P1740	Lock-Up Select Solenoid/Circuit
P1745	Line Pressure Control
P1760	Overrun Clutch Sensor/V
P1777	Stepper Motor Circuit
P1778	Stepper Motor Function
U1000	CAN Communication Circuit
U1010	Control Unit (CAN)

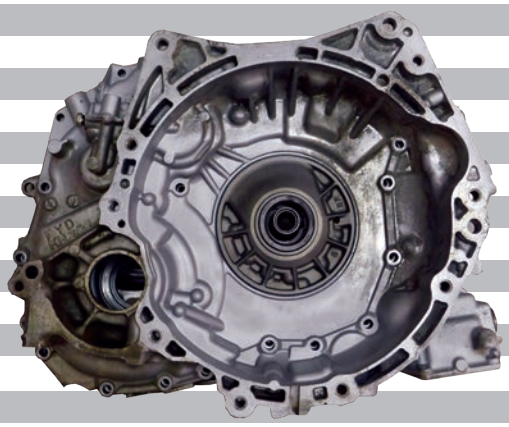

RE0F08A/B (1.8L)

© 2017 Whatever It Takes Transmission Parts. Inc.

1-800-940-0197

RE0F08B Diagnostic Trouble Codes

DTC	Description
P0703	Brake Switch B
P0705	T/M Range Sensor A
P0710	Fluid Temperature Sensor A
P0715	Input Speed Sensor A
P0720	Output Speed Sensor
P0725	Engine Speed
P0740	Torque Converter
P0744	Torque Converter
P0745	Pressure Control Solenoid A
P0746	Pressure Control Solenoid A
P0776	Pressure Control Solenoid B
P0778	Pressure Control Solenoid B
P0840	Fluid Pressure Sensor/Switch A
P0841	Fluid Pressure Sensor/Switch A
P0868	Fluid Pressure Low
P1701	TCM
P1705	Temperature Sensor
P1722	Vehicle Speed
P1723	Speed Sensor
P1726	Throttle Control Signal
P1740	SLCT Solenoid
P1777	Stepper Motor
P1778	Stepper Motor
U1000	CAN Communication Circuit
U1010	Control Unit (CAN)

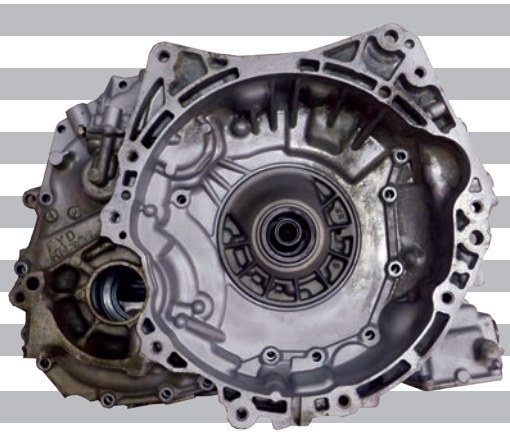

RE0F08A/B (1.8L)

© 2017 Whatever It Takes Transmission Parts. Inc.

RE0F08A (JF009E)(1XB6B)

FWD CVT

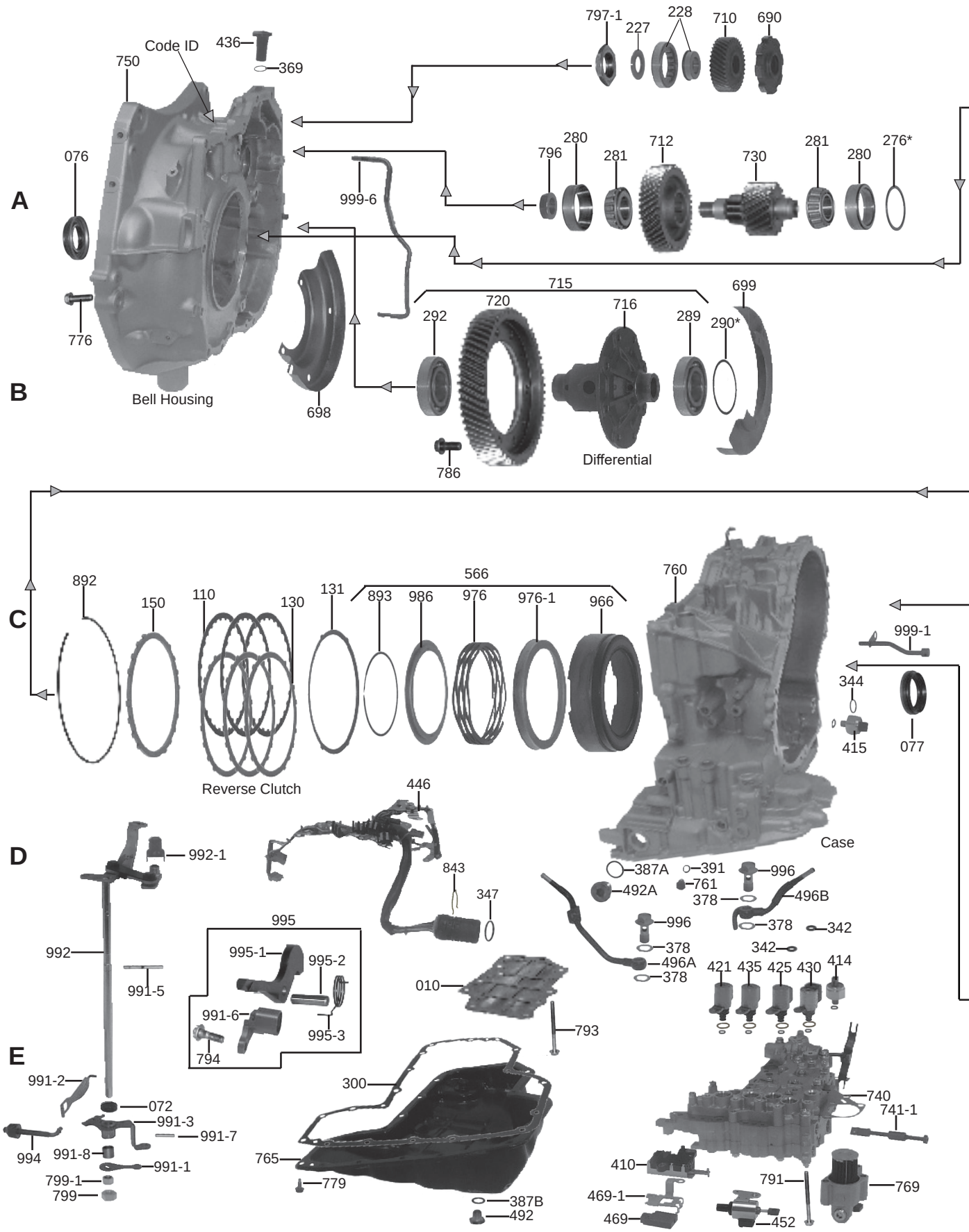

© 2017 Whatever It Takes Transmission Parts. Inc.

(1XB6B)RE0F08A(JF009E)

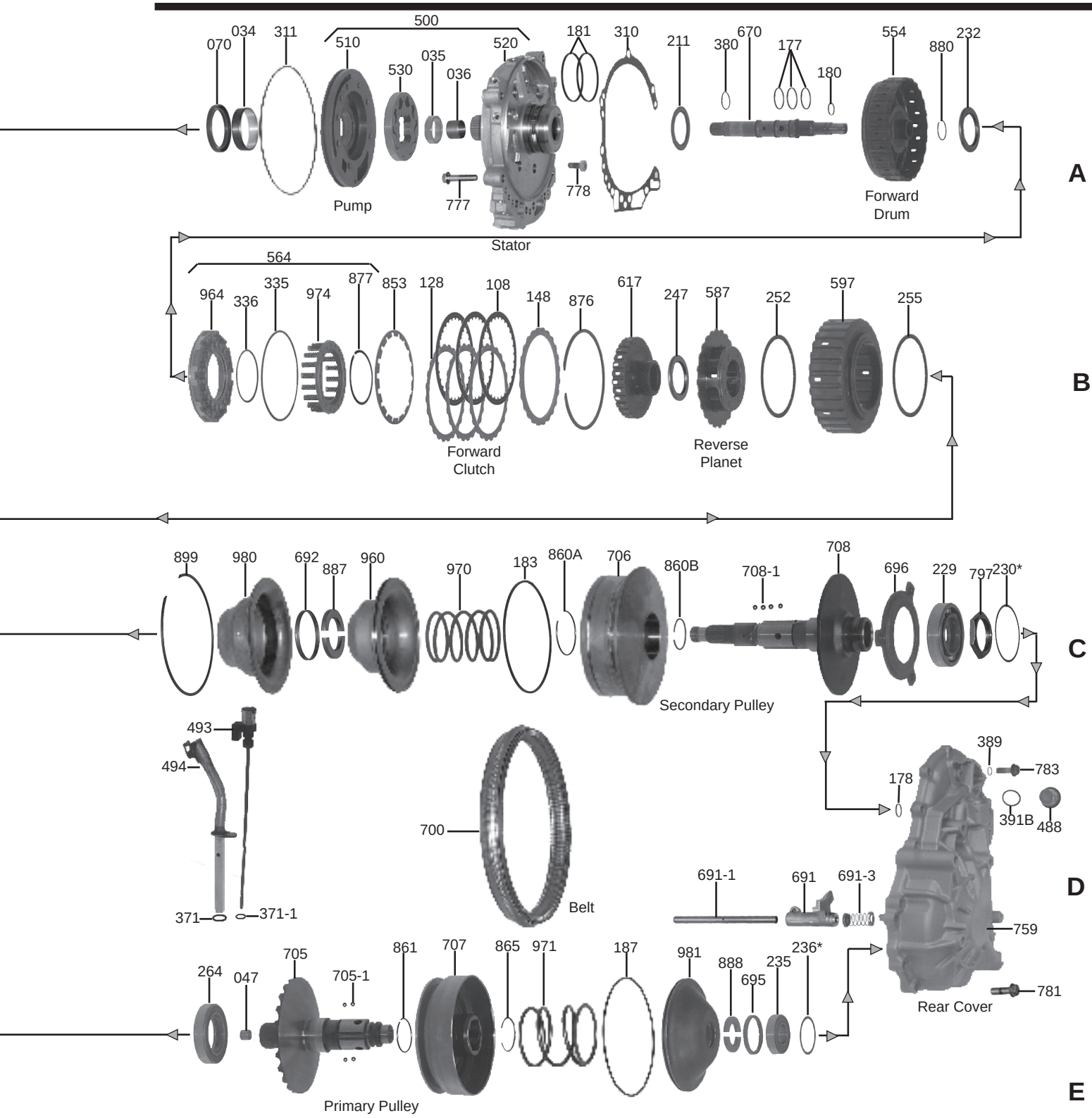

© 2017 Whatever It Takes Transmission Parts. Inc.

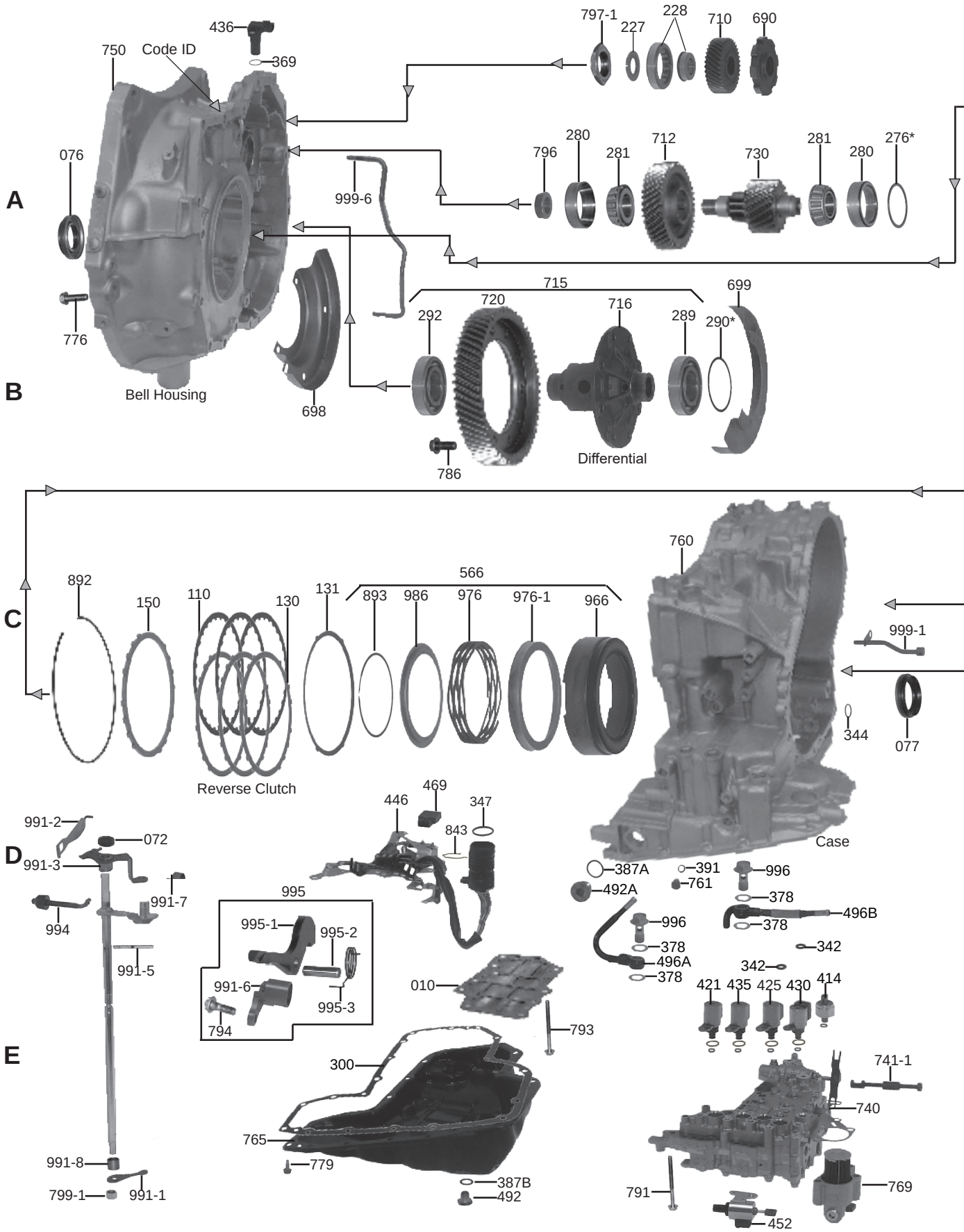

© 2017 Whatever It Takes Transmission Parts. Inc.

(1XC6B/1XC6C)RE0F08B(JF009E)

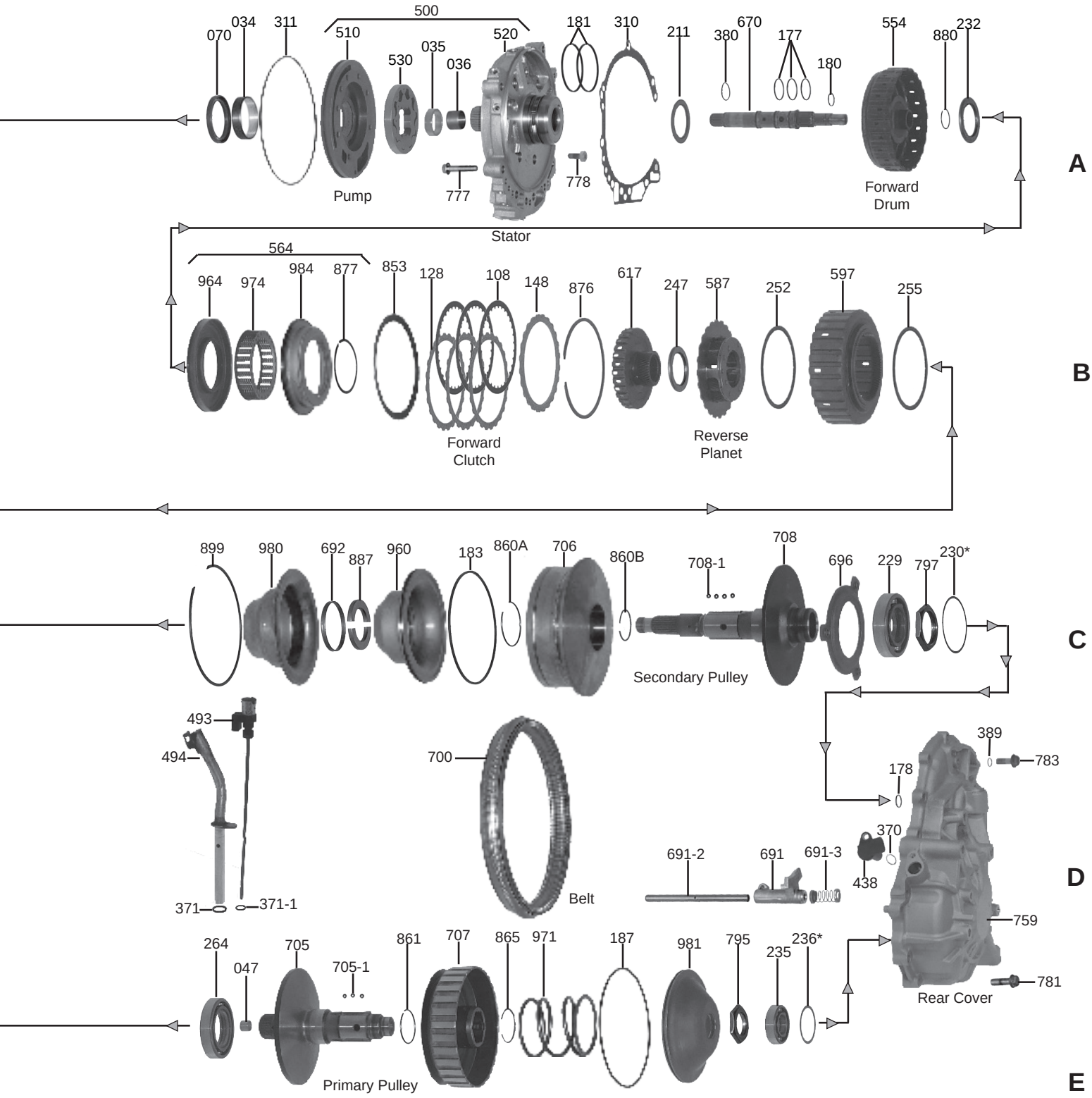

© 2017 Whatever It Takes Transmission Parts. Inc.

RE0F08A & RE0F08B Use A Gear Style Pump

WIT # 243500A

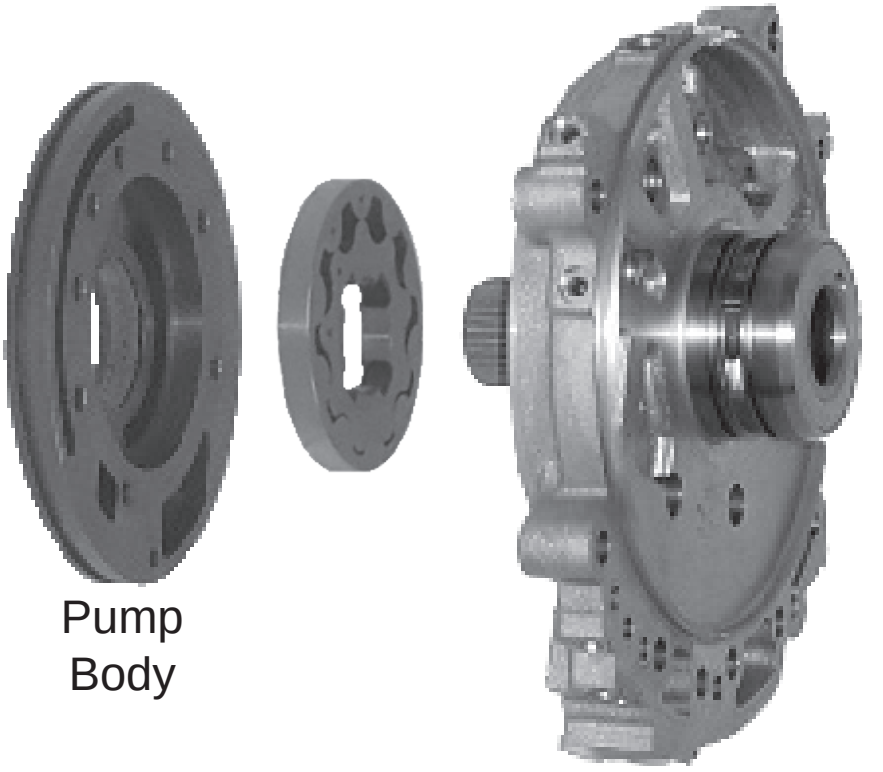

Pump Body

Stator

© 2017 Whatever It Takes Transmission Parts. Inc.

Valve Body Solenoid Identification

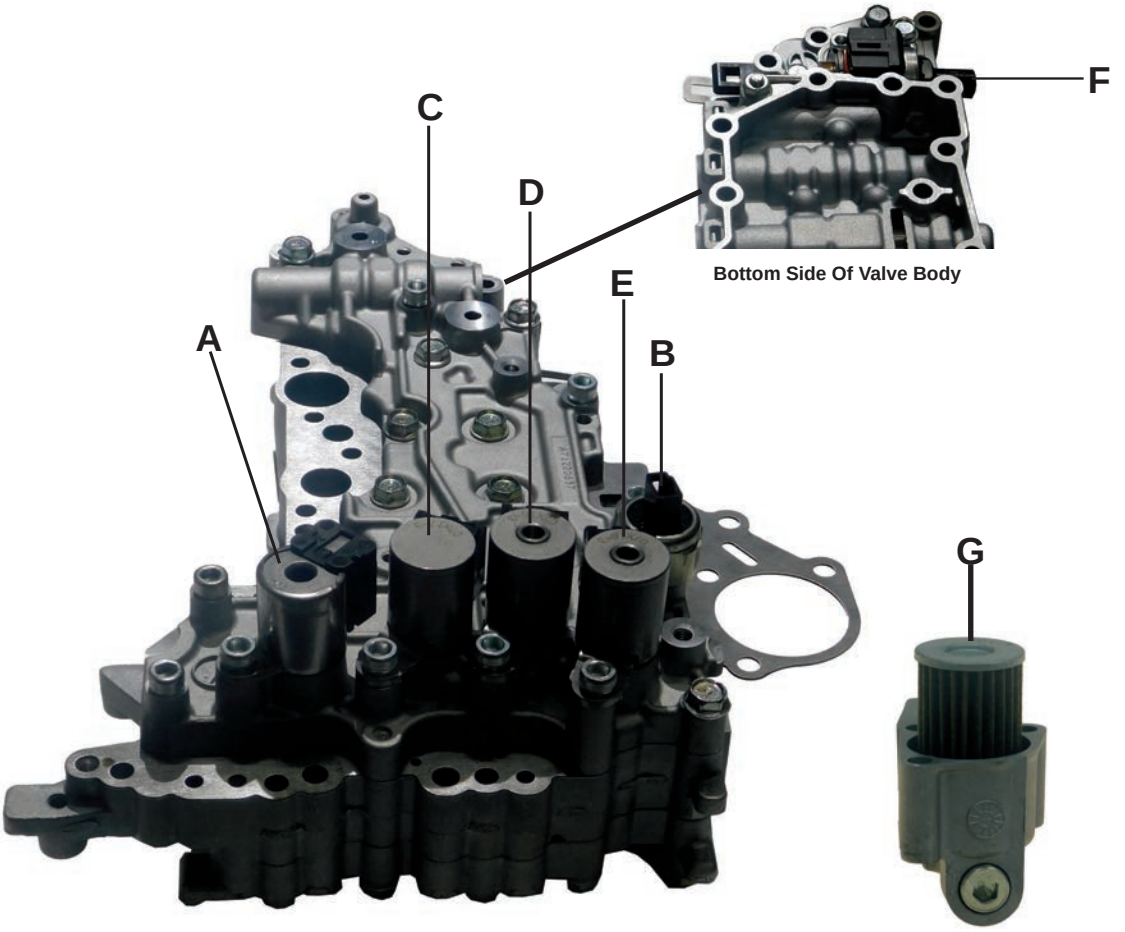

Alpha	Description	WIT Part #
	RE0F08B (JF009E) Valve Body (1XA02 & 1XC Cast) 2009-Up	243740A
	RE0F08A (JF009E) Valve Body (1XA02 & FYO Cast) 2007-Up	243740B
A	TCC Select Solenoid (On/Off)	243430A / 243430B
B	Fluid Pressure Control A Switch (Secondary Pulley)	243414A / 243414B
C	TCC Control Solenoid	243425A / 243425B
D	Pressure Control B (Secondary) Solenoid	243435A / 243435B
E	Pressure Control A (Line) Solenoid	243421A
F	Ratio Control Motor (Stepper)	243452A / 243452B
G	Filter Housing	243769A
	Wire Harness	243446A / 243446B

RE0F08A

Solenoid	Year	Ohms	Year	Ohms
Pressure Control Solenoid A	2007	2.5 - 5.0 Ω	2008-09	3-0 - 9.0 Ω
Pressure Control Solenoid B	2007	2.5 - 5.0 Ω	2008-09	3.0 - 9.0 Ω
TCC Solenoid	2007	5.0 - 20.0 Ω	2008-09	3.0 - 9.0 Ω
TCC Select Solenoid	2007	5.0 - 20.0 Ω	2008-09	6.0 - 19.0 Ω

RE0F08B

Solenoid	Year	Ohms		Ohms
Pressure Control Solenoid A	2009-14	3.0 - 9.0 Ω	Cube	5.6 - 7.6 Ω
Pressure Control Solenoid B	2009-14	3.0 - 9.0 Ω	Cube	5.6 - 7.6 Ω
TCC Solenoid	2009-14	3.0 - 9.0 Ω	Cube	5.6 - 7.6 Ω
TCC Select Solenoid	2009-14	6.0 - 19.0 Ω	Cube	12.3 - 16.7 Ω

© 2017 Whatever It Takes Transmission Parts. Inc.

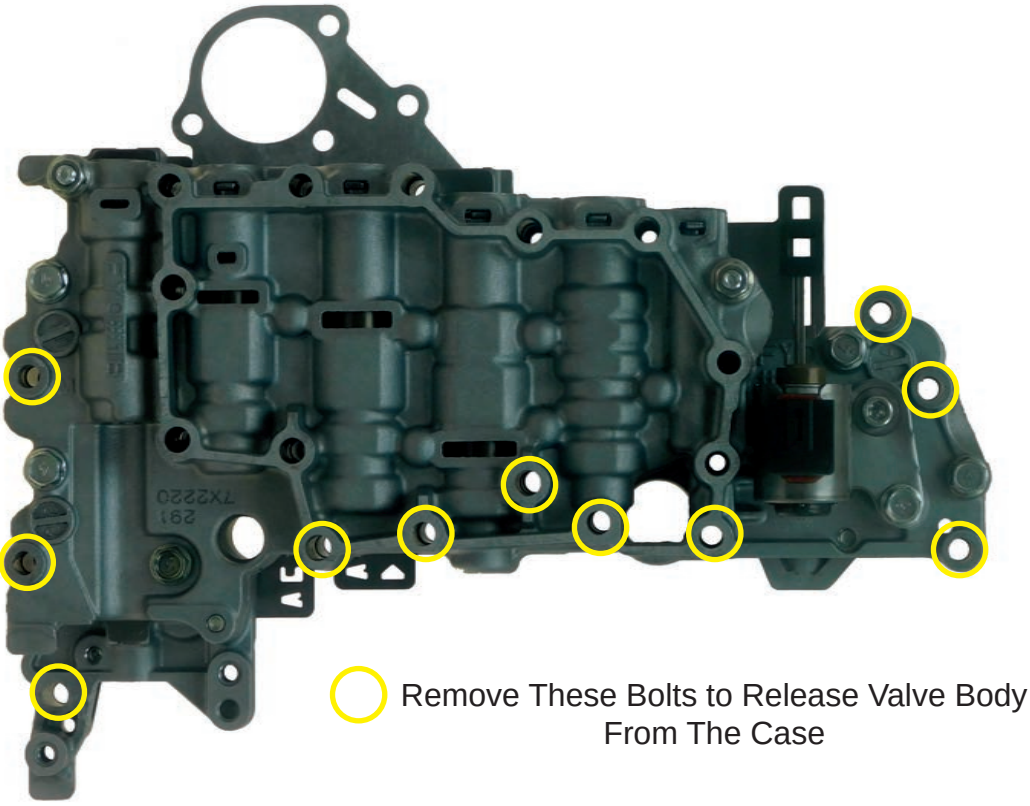

Remove These Bolts to Release Valve Body From The Case

© 2017 Whatever It Takes Transmission Parts. Inc.

1-800-940-0197

Valve Body Exploded View

Upper Valve Body Bottom View

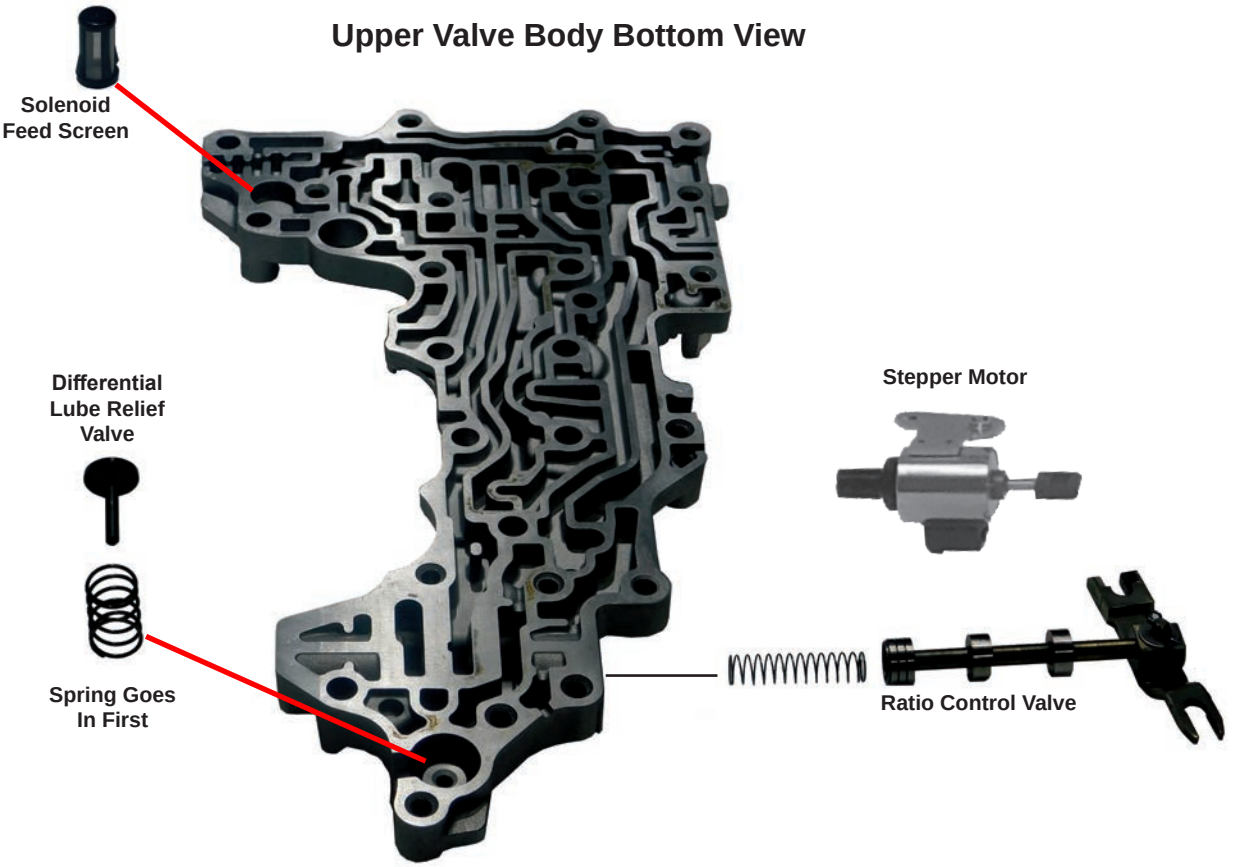

Valve Body Plates

Center Valve Body

Main Valve Body

© 2017 Whatever It Takes Transmission Parts. Inc.

Center Valve Body

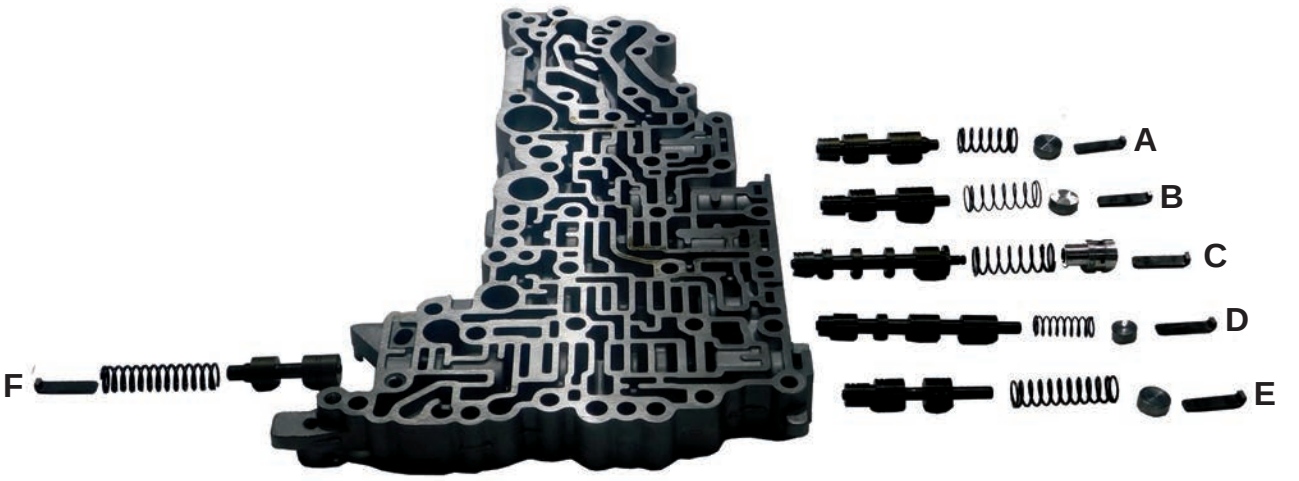

Alpha	Description	WIT Part #
A	Secondary Pulley Control	
B	TCC Regulator	S203741COSK
C	Lock-Up Control	S203741CK
D	Switching Valve	
E	Clutch Control	
F	Solenoid Regulator	S203741ALK

Main Valve Body

Alpha	Description	WIT Part #
A	Manual Valve	U243741-1A / U243741-1B
B	TCC Limit Valve	S203741FOSK
C	Secondary Pressure Regulator Valve	
D	Primary Pressure Regulator Valve	S203741PK
E	Secondary Pulley Control Valve	S203741VK
F	Plug	

© 2017 Whatever It Takes Transmission Parts. Inc.

RE0F08A / RE0F08B (JF009E)

Center Valve Body Upper View

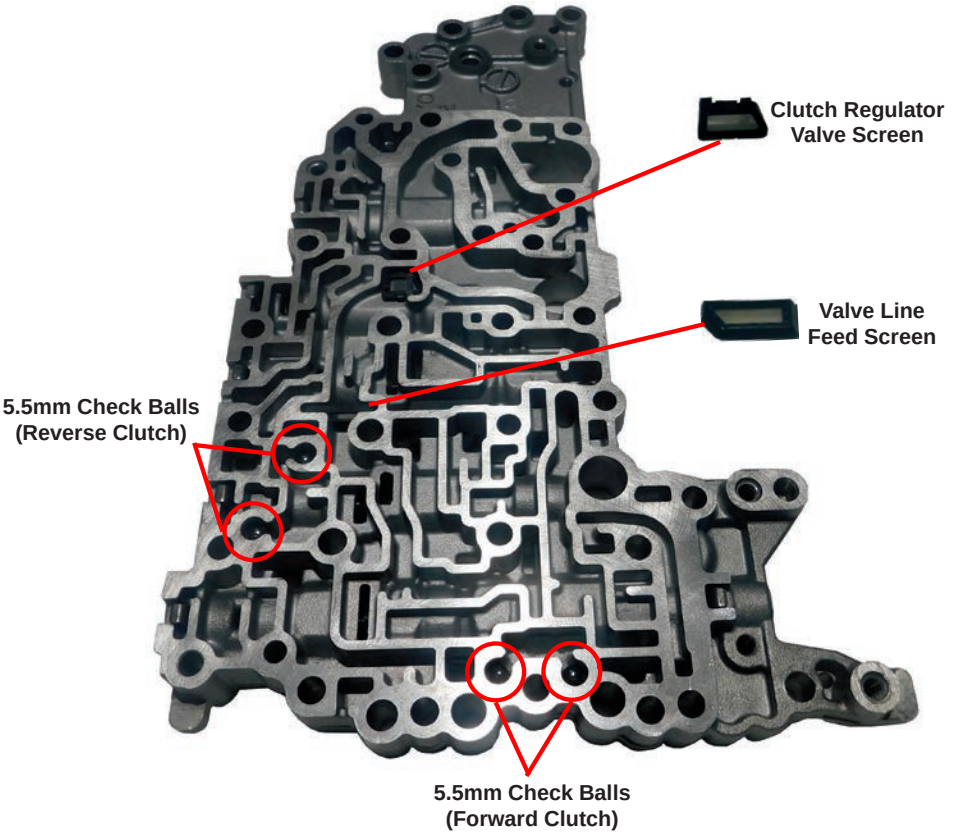

RE0F08A / RE0F08B Valve Body Plate

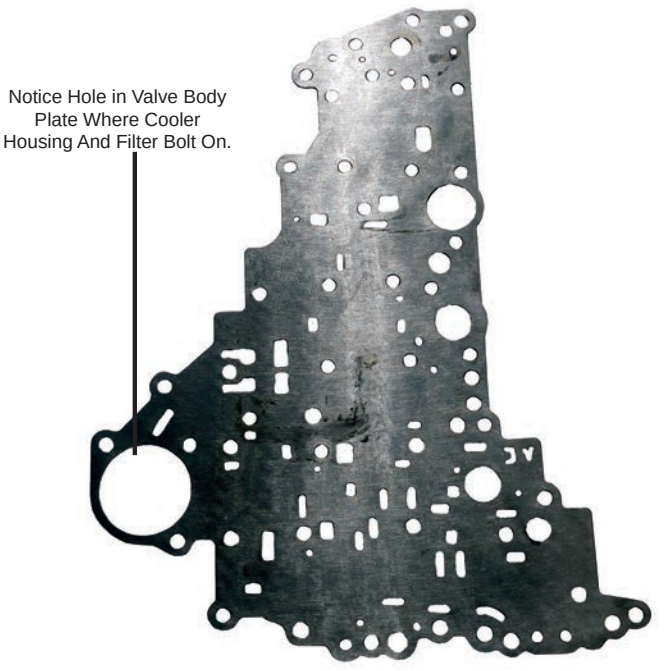

RE0F09A / RE0F09B Valve Body Plate

The Major Difference Between The RE0F08A And The RE0F09A Valve Bodies Is The Separator Plates As Shown and The Electronics. The Aluminum Castings Can Be Swapped Between Each Other After Verifying That There Are No Running Changes.

© 2017 Whatever It Takes Transmission Parts. Inc.

RE0F08A Primary Pulley

Note: During the disassembly with the TJ-1 two jaw puller, place the pulley assembly in a bucket to catch the steel balls.

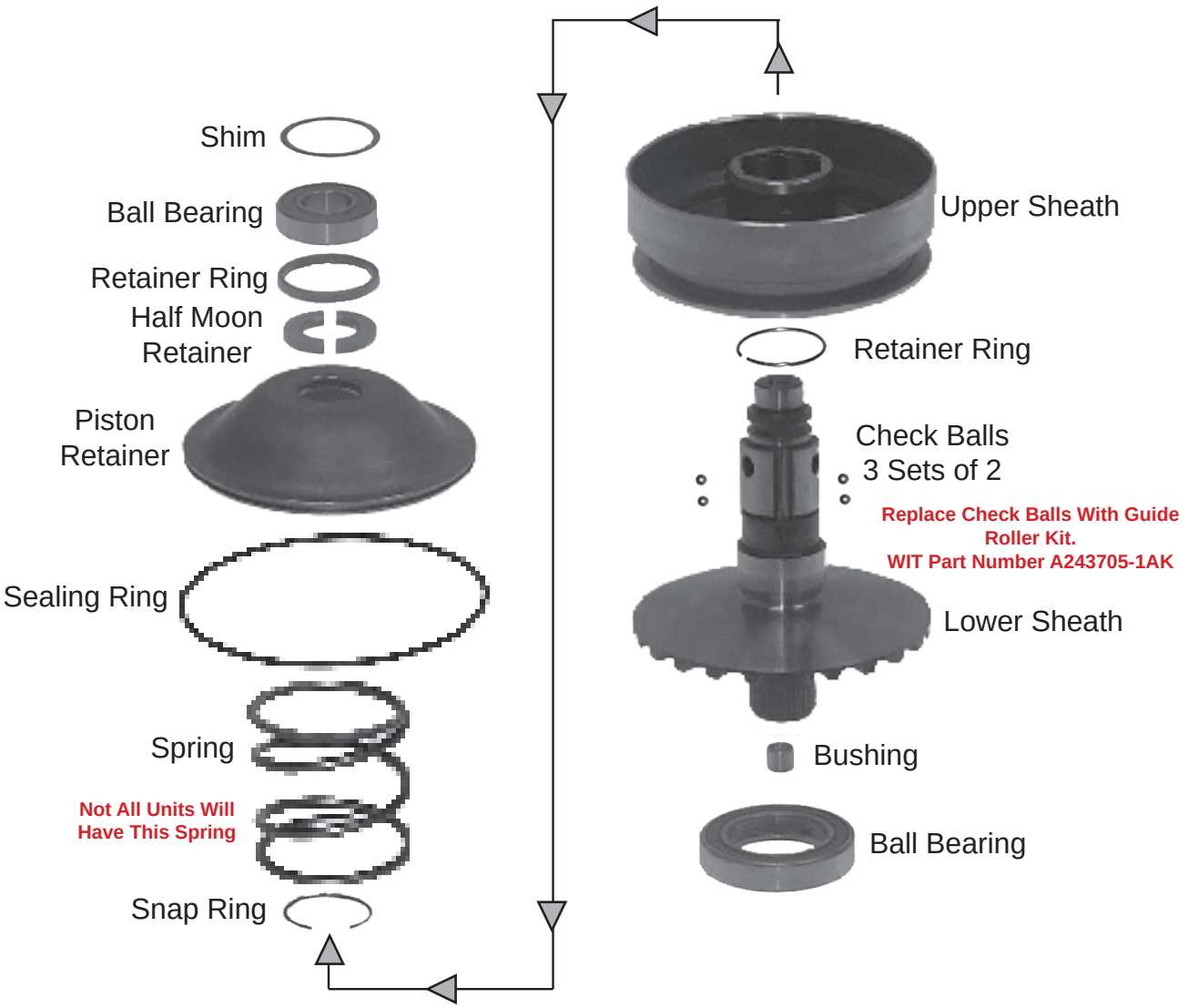

© 2017 Whatever It Takes Transmission Parts. Inc.

RE0F08A Secondary Pulley

Note: During the disassembly with the TJ-1 two jaw puller, place the pulley assembly in a bucket to catch the steel balls.

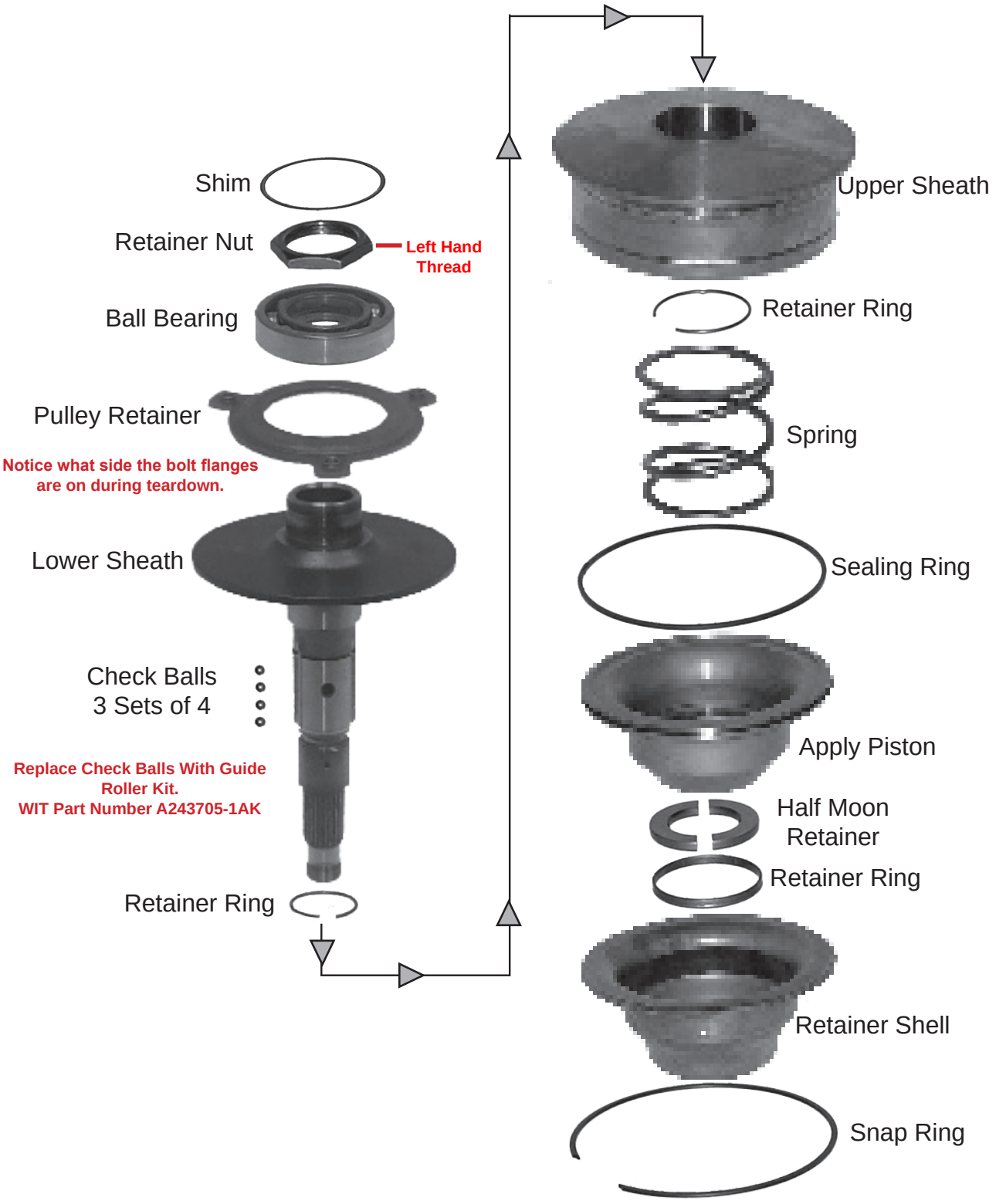

© 2017 Whatever It Takes Transmission Parts. Inc.

RE0F08B Primary Pulley

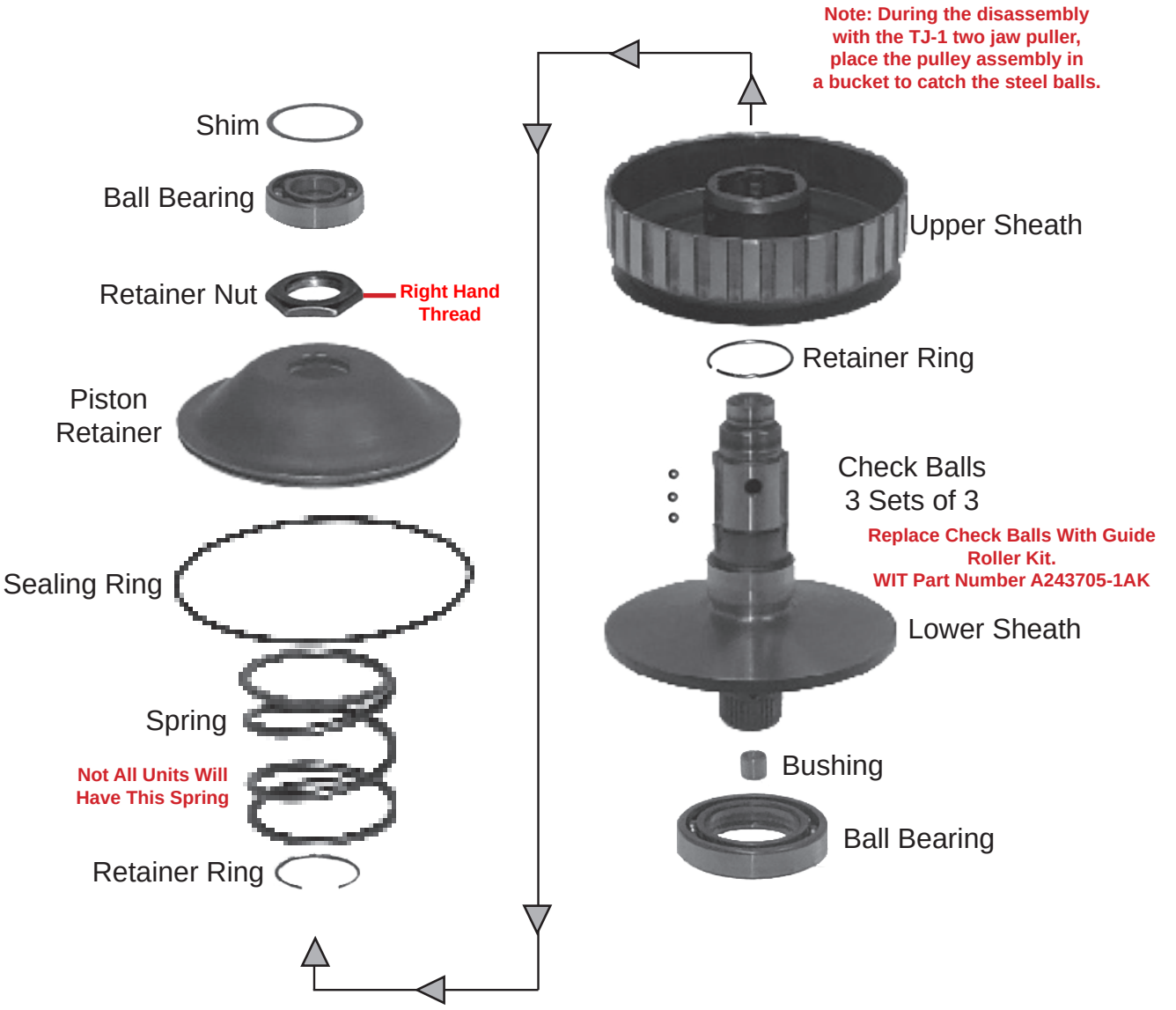

© 2017 Whatever It Takes Transmission Parts. Inc.

RE0F08B Secondary Pulley

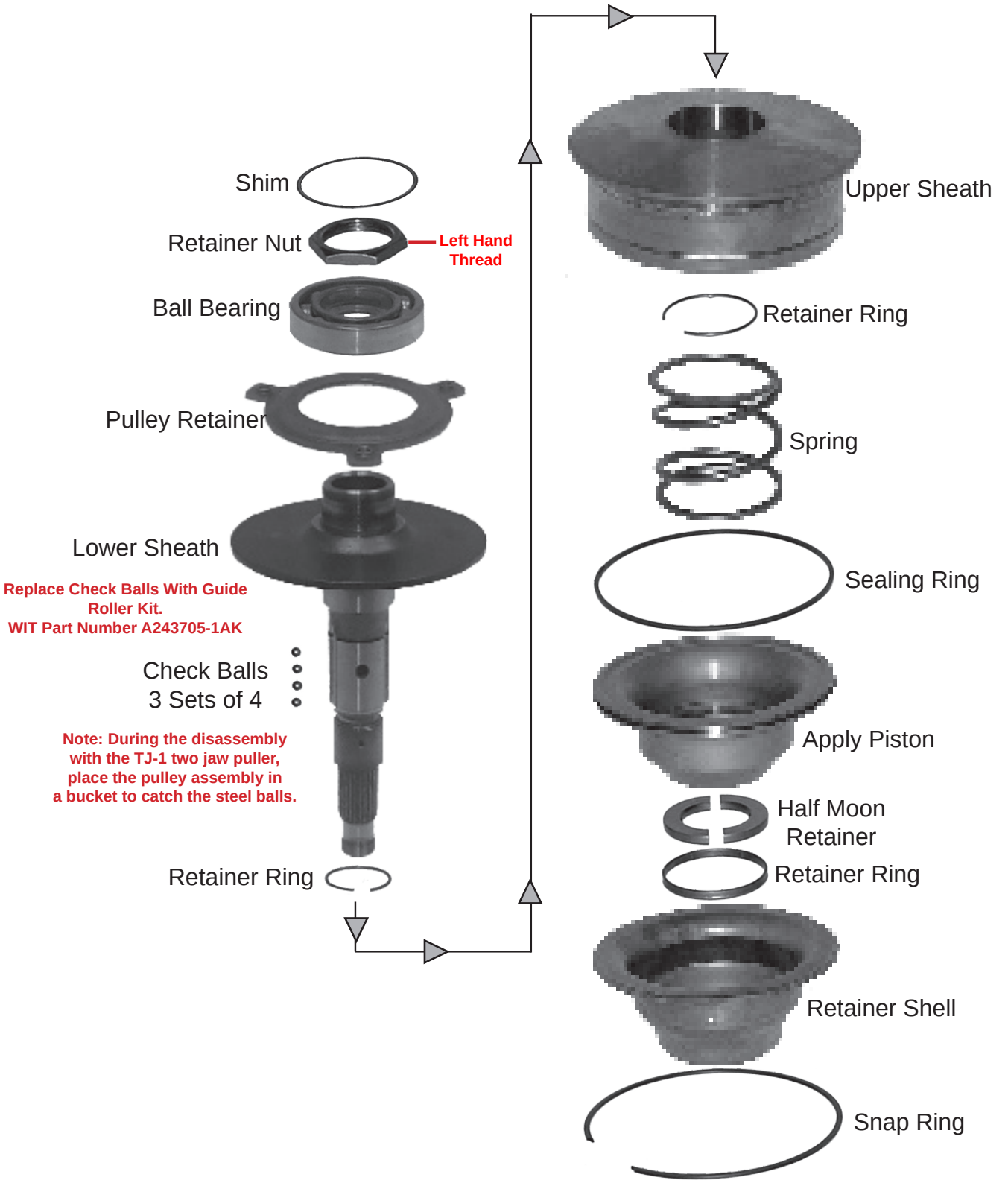

© 2017 Whatever It Takes Transmission Parts. Inc.

RE0F09A Diagnostic Trouble Codes

DTC	Description
P0615	Start Signal Circuit
P0703	Stop Lamp Switch Circuit
P0705	Park/Neutral Position Switch
P0710	CVT Fluid Temperature Sensor Circuit
P0715	Input Speed Sensor (PRI Speed Sensor)
P0720	Vehicle Speed Sensor CVT (Secondary Speed Sensor)
P0725	Engine Speed Signal
P0730	Belt Damage
P0740	Torque Converter Clutch Solenoid Valve
P0744	Automatic Transmission TCC Solenoid Valve Function (Lock-Up)
P0745	Line Pressure Solenoid Valve
P0746	Pressure Control Solenoid A Performance (Line Presuure Solenoid Valve)
P0776	Pressure Control Solenoid B Performance (Secondary Pressure Solenoid Valve)
P0778	Pressure Control Solenoid B Electrical (Secondary Pressure Solenoid Valve)
P0840	Transmission Fluid Pressure Sensor A Circuit (Secondary Pressure Sensor)
P0841	Pressure Sensor Function
P0845	Transmission Fluid Pressure Sensor B Circuit (Primary Pressure Sensor)
P0868	Secondary Pressure Down
P1705	Throttle Position Sensor
P1722	ESTM Vehicle Speed Signal
P1723	CVT Speed Sensor Function
P1726	Electric Throttle Control System
P1740	Lock-Up Select Solenoid Valve Circuit
P1745	Line Pressure Control
P1777	Stepper Motor Circuit
P1778	Stepper Motor Function
U1000	CAN Communication Line

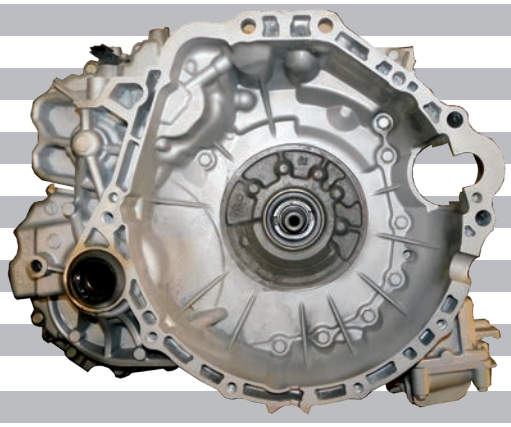

RE0F09A/B (2WD)

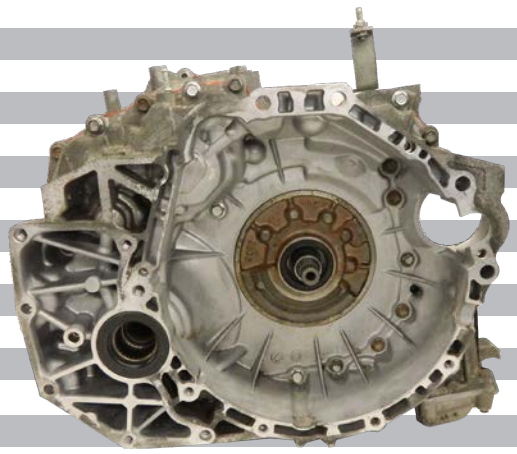

RE0F09A/B (4 x 4)

© 2017 Whatever It Takes Transmission Parts. Inc.

1-800-940-0197

RE0F09B Diagnostic Trouble Codes

DTC	Description
P0615	Starter Relay
P0703	Brake Switch B
P0705	Transmission Range Switch A
P0710	Transmission Fluid Temperature Sensor A
P0715	Input Speed Sensor A
P0720	Output Speed Sensor
P0725	Engine Speed
P0730	Incorrect Gear Ratio
P0740	Torque Converter
P0744	Torque Converter
P0745	Pressure Control Solenoid A
P0746	Pressure Control Solenoid A
P0776	Pressure Control Solenoid B
P0778	Pressure Control Solenoid B
P0826	Up & Down Shift Switch
P0840	Transmission Fluid Pressure Sensor/Switch A
P0841	Transmission Fluid Pressure Sensor/Switch A
P0845	Transmission Fluid Pressure Sensor/Switch B
P0868	Transmission Fluid Pressure
P1701	TCM
P1705	Temperature Sensor
P1722	Vehicle Speed
P1723	Speed Sensor
P1726	Throttle Control Signal
P1740	Select Solenoid
P1745	Line Pressure Control
P1777	Stepper Motor
P1778	Stepper Motor
U1000	CAN Communication Circuit

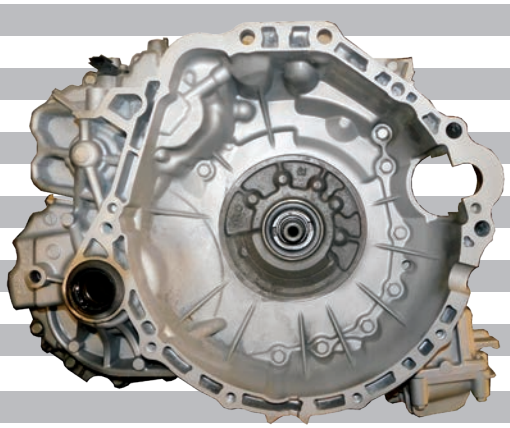

RE0F09A/B (2WD)

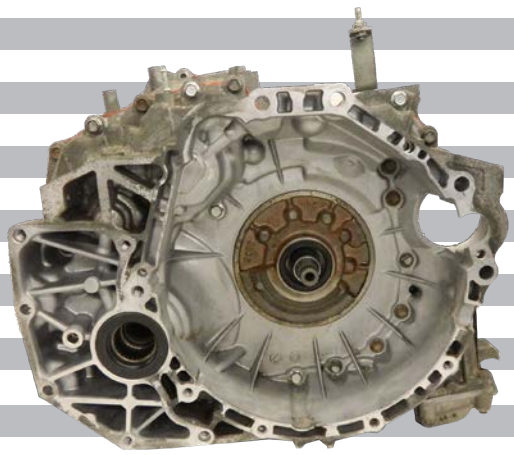

RE0F09A/B (4 x 4)

© 2017 Whatever It Takes Transmission Parts. Inc.

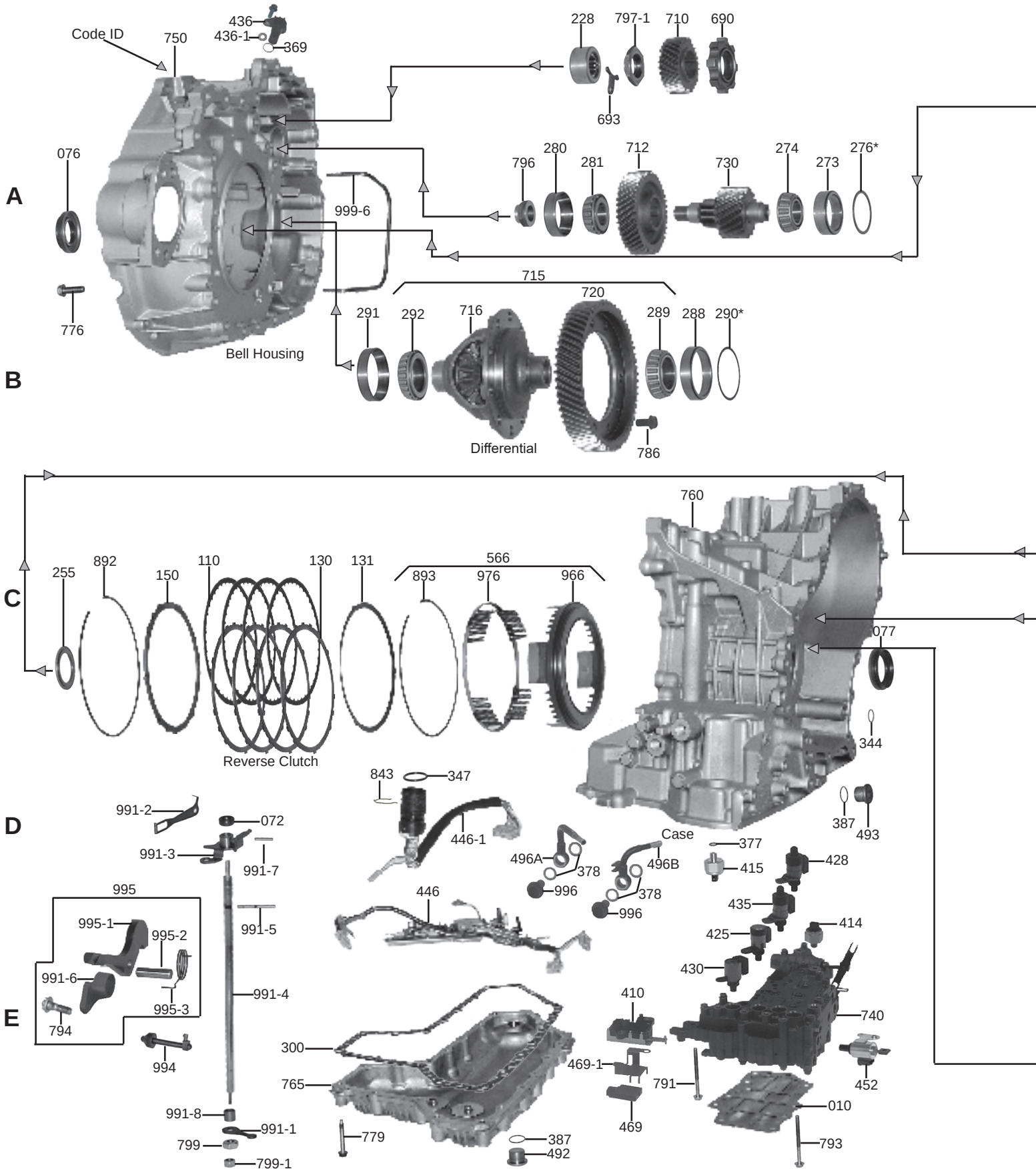

© 2017 Whatever It Takes Transmission Parts. Inc.

RE0F09A (1XD) / RE0F09B (1XE) (JF010E)

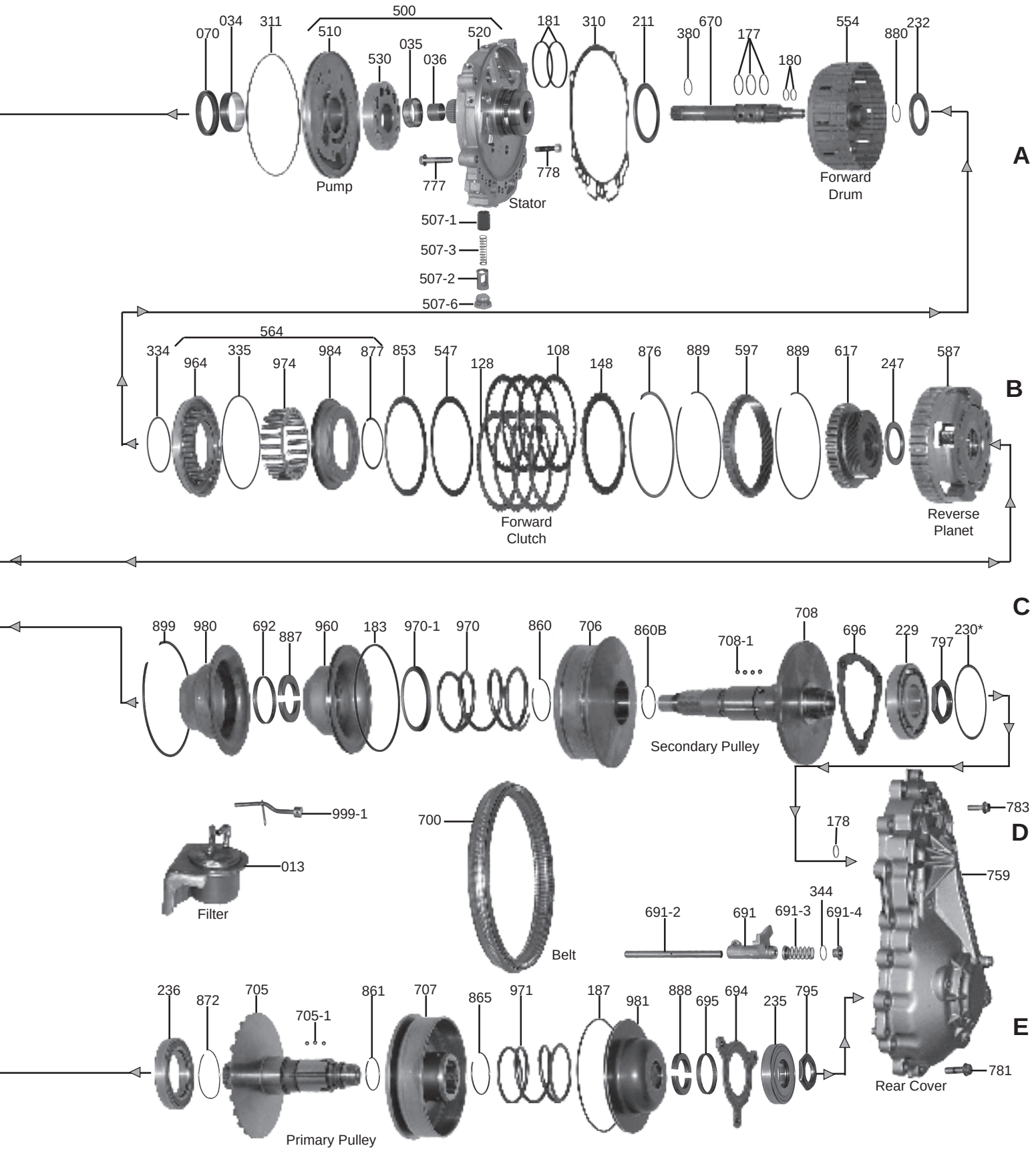

© 2017 Whatever It Takes Transmission Parts. Inc.

RE0F09A & RE0F09B Use A Gear Style Pump

WIT # 203500A

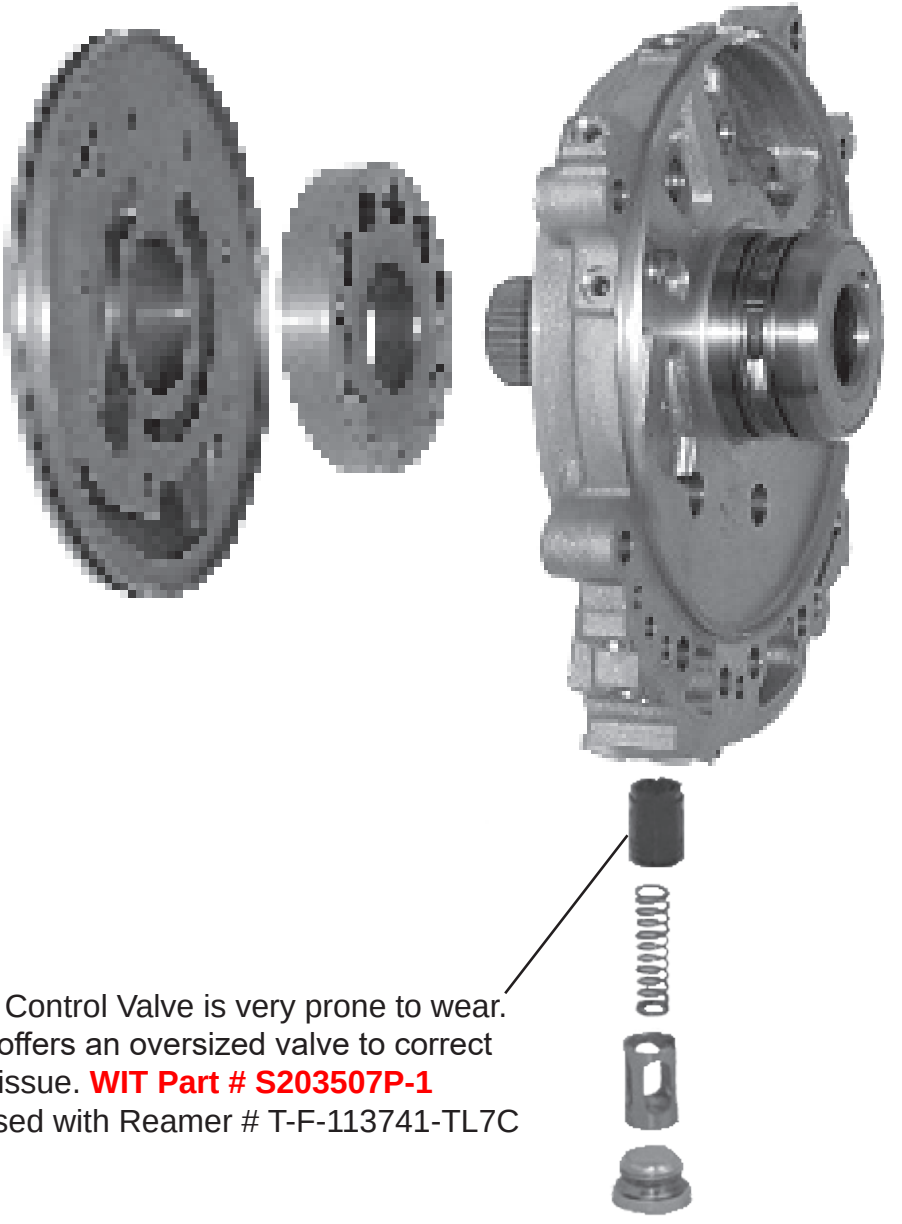

The Flow Control Valve is very prone to wear. Sonnax offers an oversized valve to correct this issue. **WIT Part # S203507P-1**
Must be used with Reamer # T-F-113741-TL7C

© 2017 Whatever It Takes Transmission Parts. Inc.

Valve Body Solenoid Identification

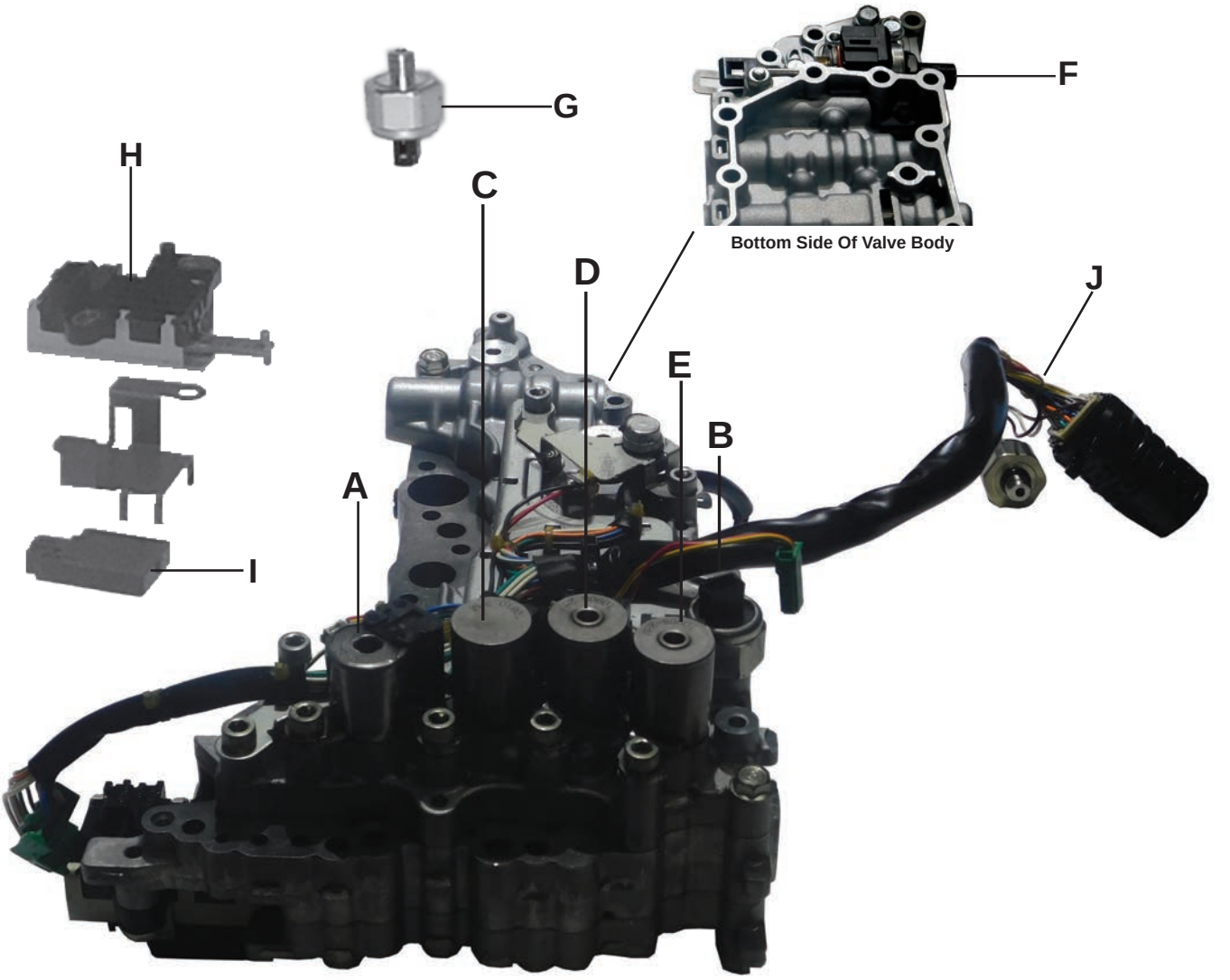

Alpha	Description	WIT Part #
	RE0F09A Valve Body (Cast # FYO#2A, #1A, #1B, or #3B) 2003-Up	203740A
	RE0F09B Valve Body (Cast #1XE, FYO#3B, #2B, or #1B) 2007-14	203740B
A	TCC Select Solenoid (On/Off)	203430A
B	Fluid Pressure Control A Switch (Secondary Pulley)	203414A
C	TCC Control Solenoid	203425A / 203425AA
D	Pressure Control B (Secondary) Solenoid	203435A
E	Pressure Control A (Line) Solenoid	203428A
F	Ratio Control Motor (Stepper)	203452A
G	Primary Pressure Switch (Screws Into Case)	203414A
H	Park / Nuetral Switch	203410A
I	Rom Assembly	203469A / 203469AA
J	Wire Harness (Includes Primary Speed Sensor)	203446A / 203446AA

© 2017 Whatever It Takes Transmission Parts. Inc.

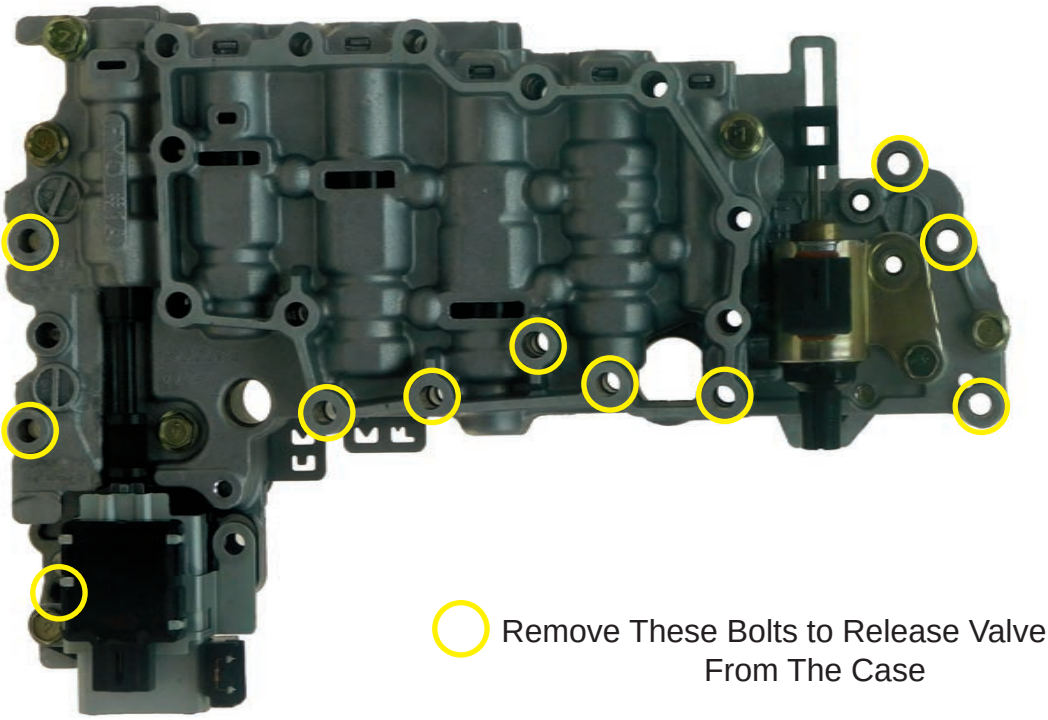

Remove These Bolts to Release Valve Body From The Case

© 2017 Whatever It Takes Transmission Parts. Inc.

1-800-940-0197

Valve Body Exploded View

Upper Valve Body Bottom View

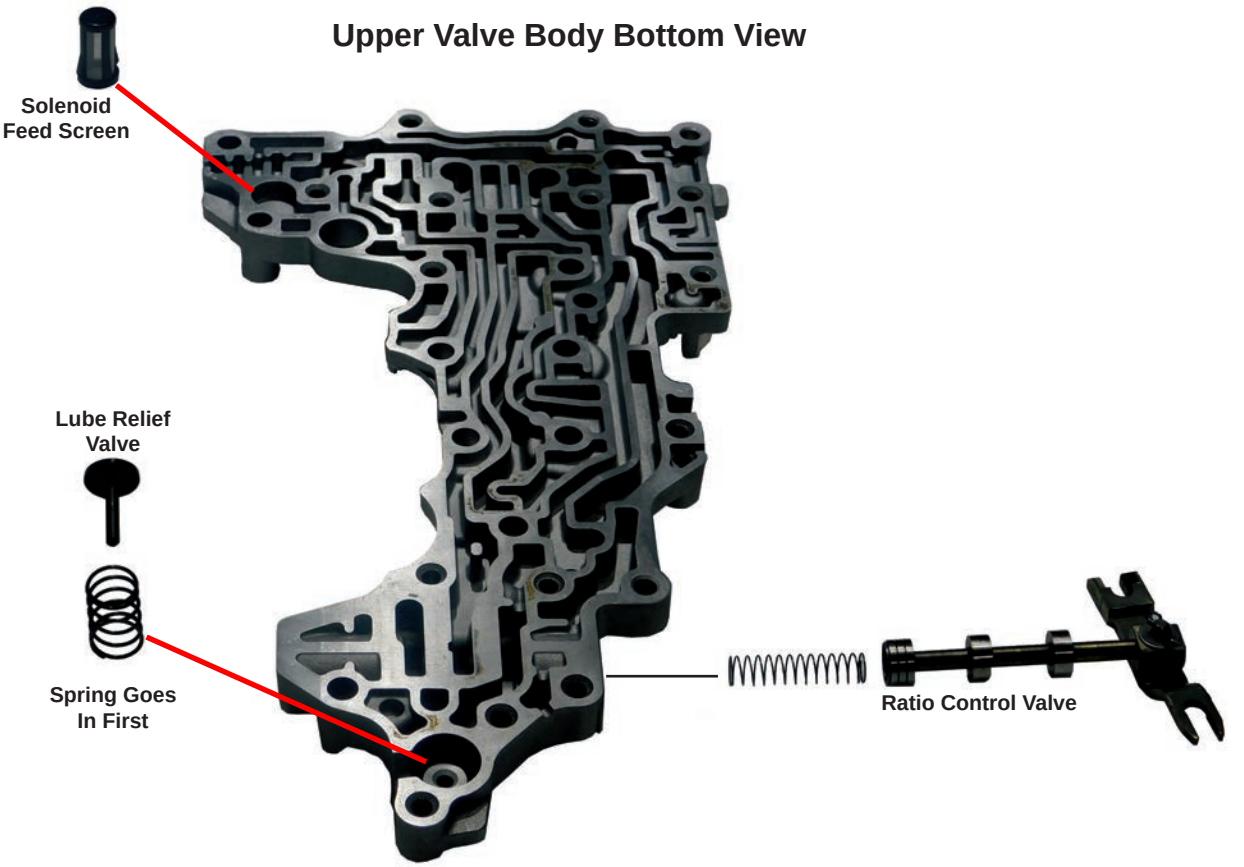

Valve Body Plates

Center Valve Body

Main Valve Body

© 2017 Whatever It Takes Transmission Parts. Inc.

Center Valve Body

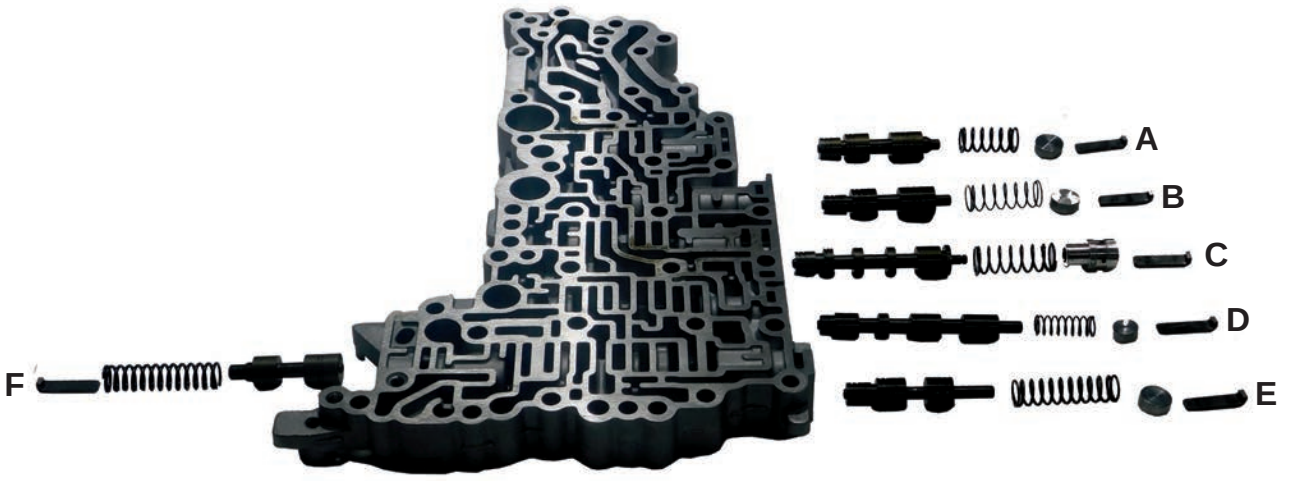

Alpha	Description	WIT Part #
A	Secondary Pulley Control	
B	TCC Regulator	S203741COSK
C	Lock-Up Control	S203741CK
D	Switching Valve	
E	Clutch Control	
F	Solenoid Regulator	S203741ALK

Main Valve Body

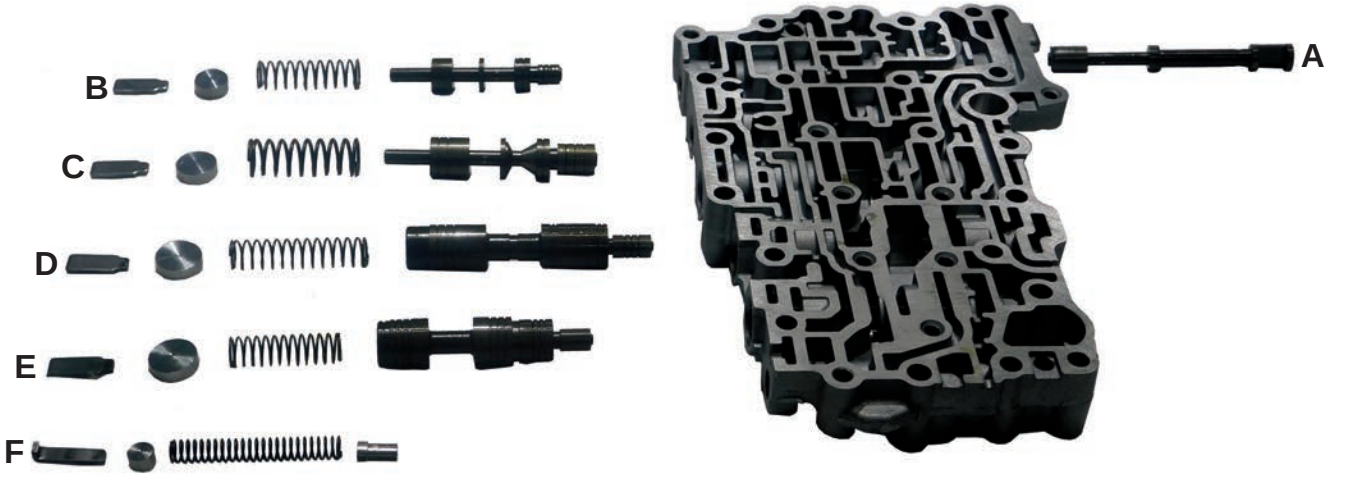

Alpha	Description	WIT Part #
A	Manual Valve	U243741-1B
B	TCC Limit Valve	S203741FOSK
C	Secondary Pressure Regulator Valve	
D	Primary Pressure Regulator Valve	S203741PK
E	Secondary Pulley Control Valve	S203741VK
F	Plug	

© 2017 Whatever It Takes Transmission Parts. Inc.

1-800-940-0197

RE0F09A / RE0F09B (JF010E)

Center Valve Body Upper View

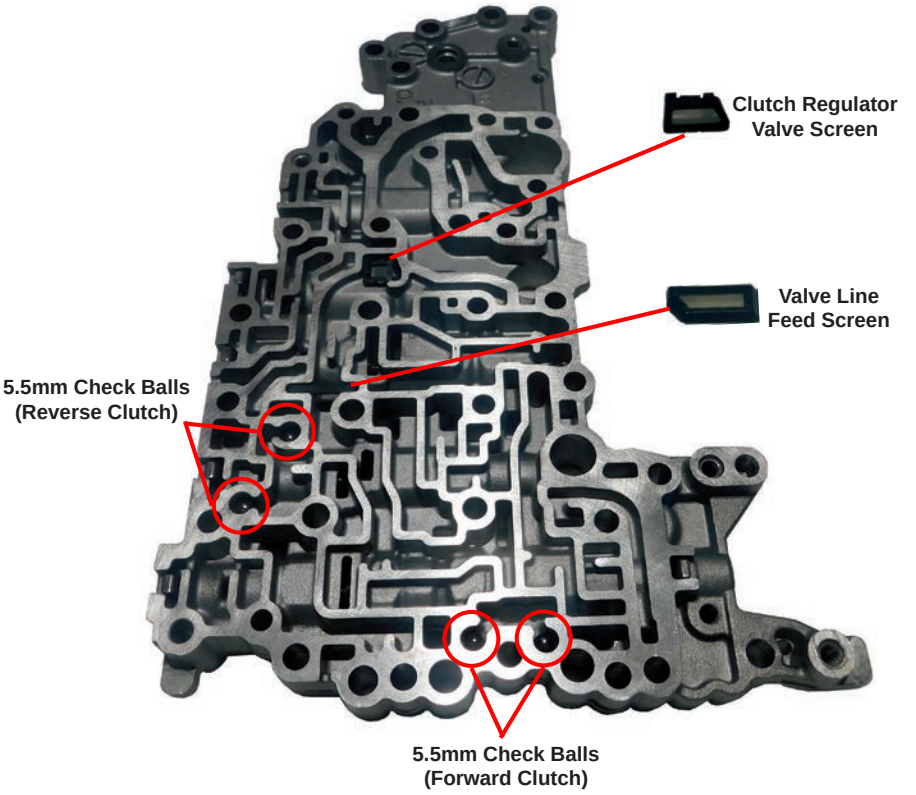

RE0F09A / RE0F09B Valve Body Plate

RE0F08A / RE0F08B Valve Body Plate

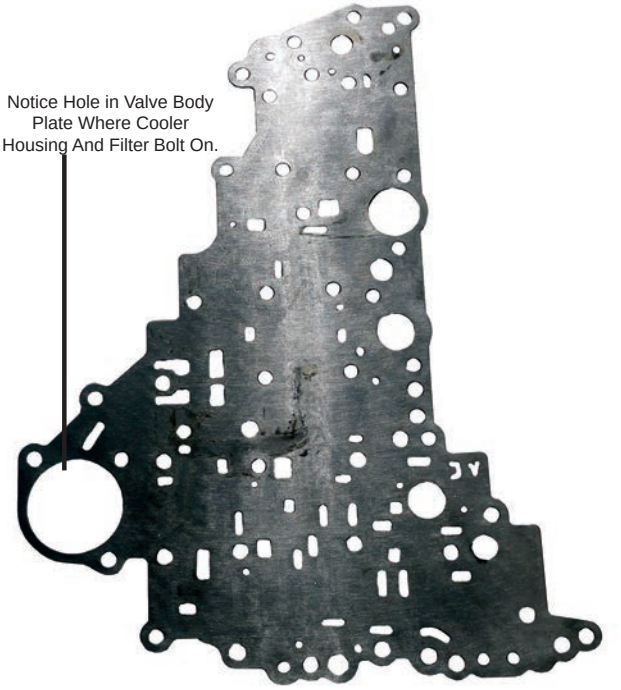

The Major Difference Between The RE0F09A And The RE0F08A Valve Bodies Is The Separator Plates As Shown and The Electronics. The Aluminum Castings Can Be Swapped Between Each Other After Verifying That There Are No Running Changes.

© 2017 Whatever It Takes Transmission Parts. Inc.

Primary Pulley

Note: During the disassembly with the TJ-1 two jaw puller, place the pulley assembly in a bucket to catch the steel balls.

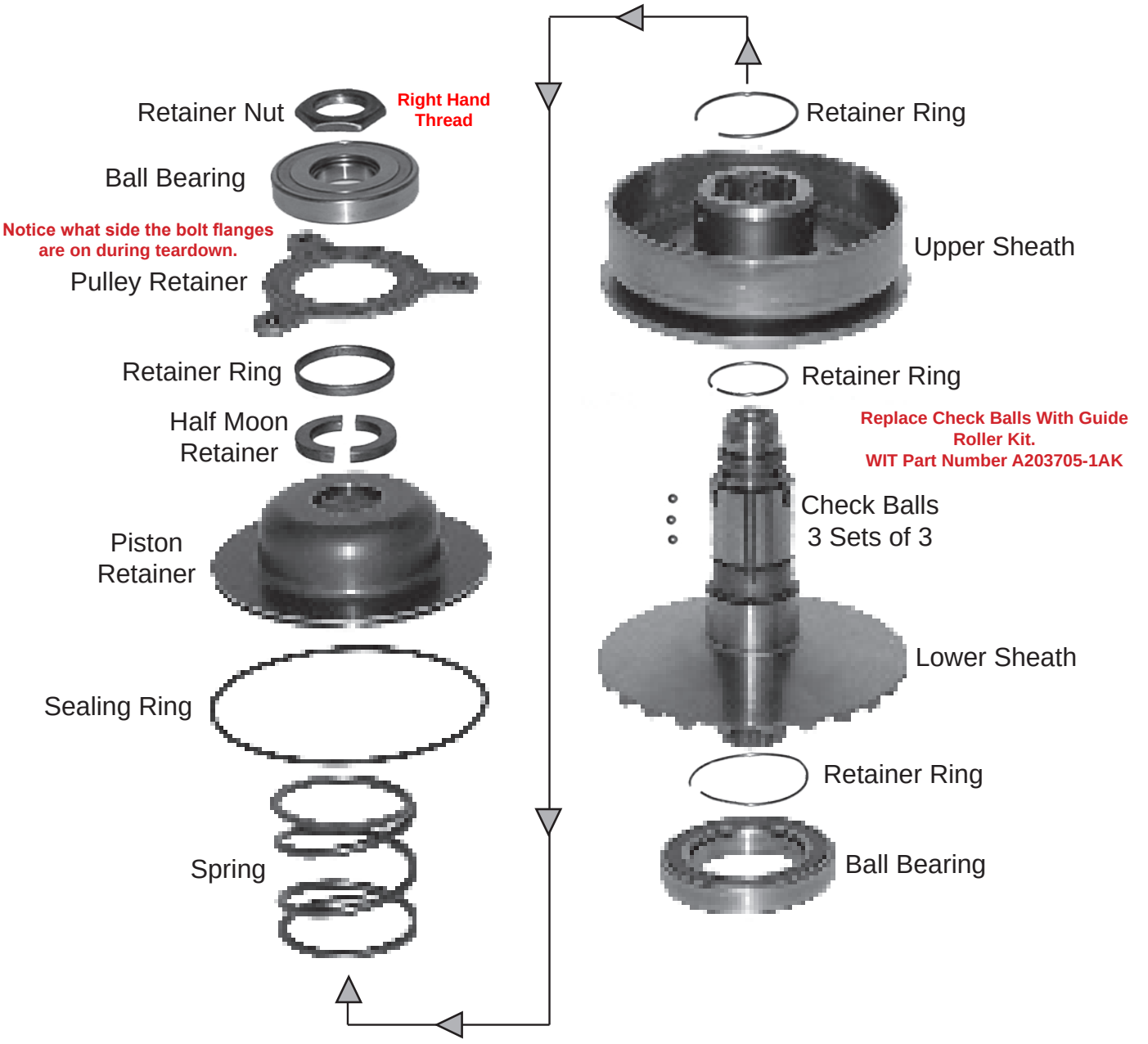

© 2017 Whatever It Takes Transmission Parts. Inc.

Secondary Pulley

Note: During the disassembly with the TJ-1 two jaw puller, place the pulley assembly in a bucket to catch the steel balls.

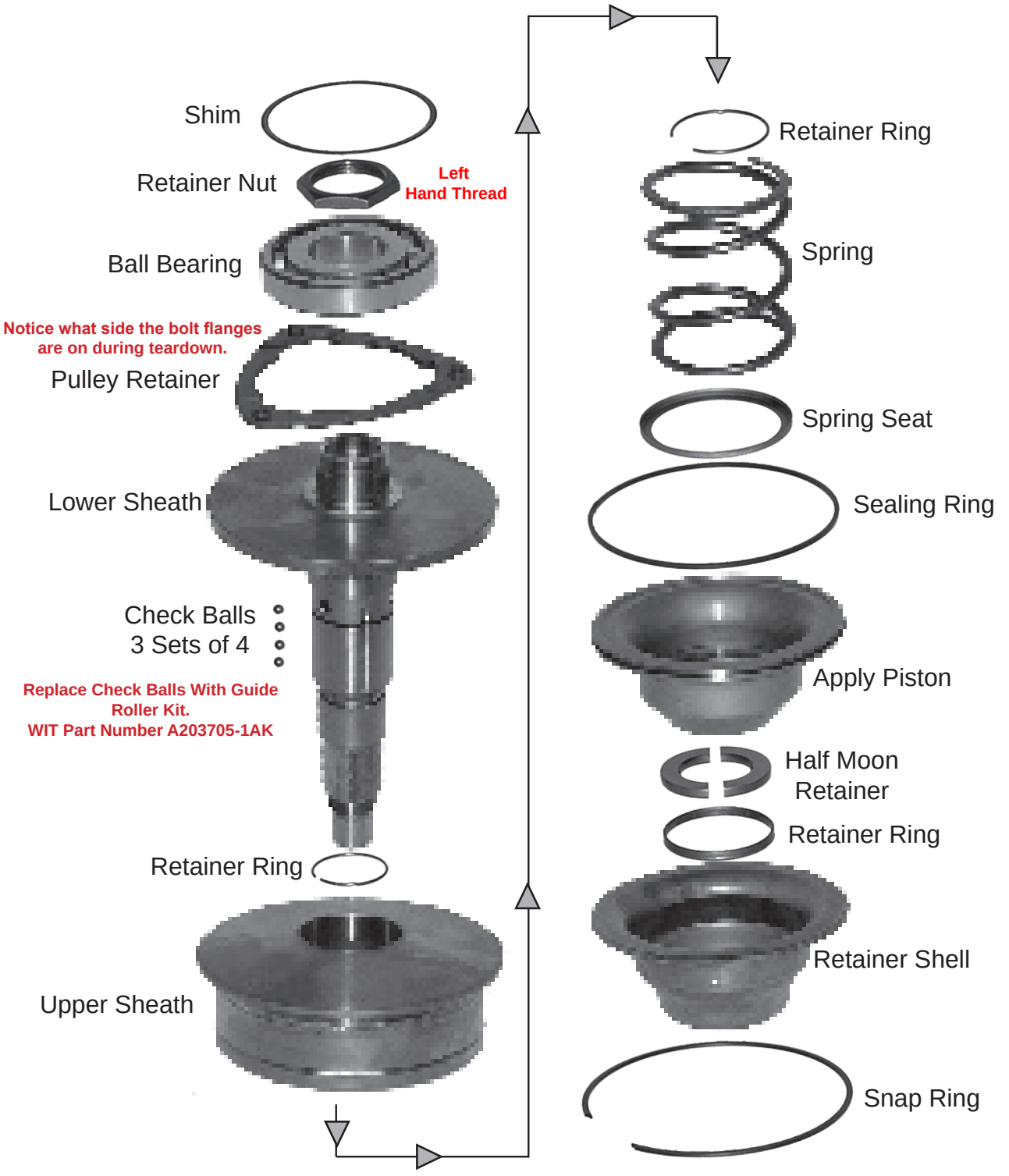

© 2017 Whatever It Takes Transmission Parts. Inc.

RE0F10A Diagnostic Trouble Codes

DTC	Description
P0703	Stop Lamp Switch
P0705	Park/Neutral Position Switch
P0710	CVT Fluid Temperature Sensor
P0715	Input Speed Sensor (PRI Speed Sensor)
P0720	Vehicle Speed Senor CVT (Secondary Speed Sensor)
P0725	Engine Speed Signal
P0730	Belt Damage
P0740	Torque Converter Clutch Solenoid Valve
P0744	A/T TCC S/V Function (Lock-Up)
P0745	Line Pressure Solenoid Valve
P0746	Pressure Control Solenoid A Performance (Line Pressure Solenoid Valve)
P0776	Pressure Control Solenoid A Performance (Line Pressure Solenoid Valve)
P0778	Pressure Control Solenoid A Performance (Line Pressure Solenoid Valve)
P0826	Manual Mode Switch
P0840	Transmission Fluid Pressure Sensor A (Secondary Pressure Sensor)
P0841	Pressure Sensor Function
P0845	Transmission Fluid Pressure Sensor B (Primary Pressure Sensor)
P0868	Secondary Pressure Down
P1701	Transmission Control Module (Power Supply)
P1705	Throttle Position Sensor
P1722	ESTM Vehicle Speed Signal
P1723	CVT Speed Sensor Function
P1726	Electric Throttle Control System
P1740	Lock-Up Select Solenoid Valve
P1745	Line Pressure Control
P1777	Step Motor
P1778	Step Motor Function
U1010	Control Unit (CAN)

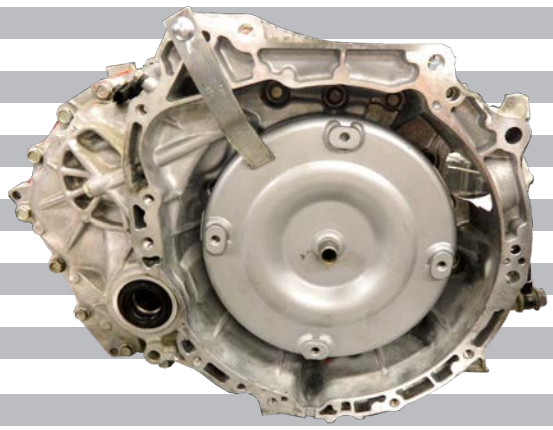

RE0F10A (2.5L)

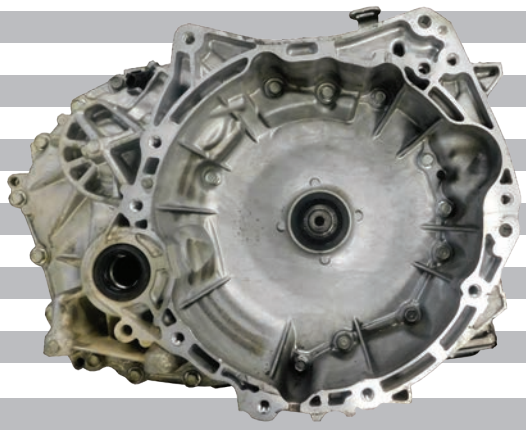

RE0F10A (2.0L)

© 2017 Whatever It Takes Transmission Parts. Inc.

1-800-940-0197

RE0F10B Diagnostic Trouble Codes

DTC	Description
P0703	Brake Switch B
P0705	Transmission Range Sensor A
P0710	Transmission Fluid Temperature Sensor A
P0715	Input Speed Sensor A
P0720	Output Speed Sensor
P0725	Engine Speed
P0740	Torque Converter
P0744	Torque Converter
P0745	Pressure Control Solenoid A
P0746	Pressure Control Solenoid A
P0776	Pressure Control Solenoid B
P0778	Pressure Control Solenoid B
P0826	Up & Down Shift Switch
P0840	Transmission Fluid Pressure Sensor/Switch A
P0841	Transmission Fluid Pressure Sensor/Switch A
P0868	Transmission Fluid Pressure
P1701	TCM
P1705	Temperature Sensor
P1709	Incompleted Data Writing
P1722	Vehicle Speed
P1723	Speed Sensor
P1726	Throttle Control Signal
P1740	Select Solenoid
P1777	Stepper Motor
P1778	Stepper Motor
U0100	Lost Communication (ECM A)
U1000	CAN Communication Circuit
U1010	Control Unit (CAN)

© 2017 Whatever It Takes Transmission Parts. Inc.

RE0F10A (JF011E) (1XF / 1XT / 3UX)

CVT FWD

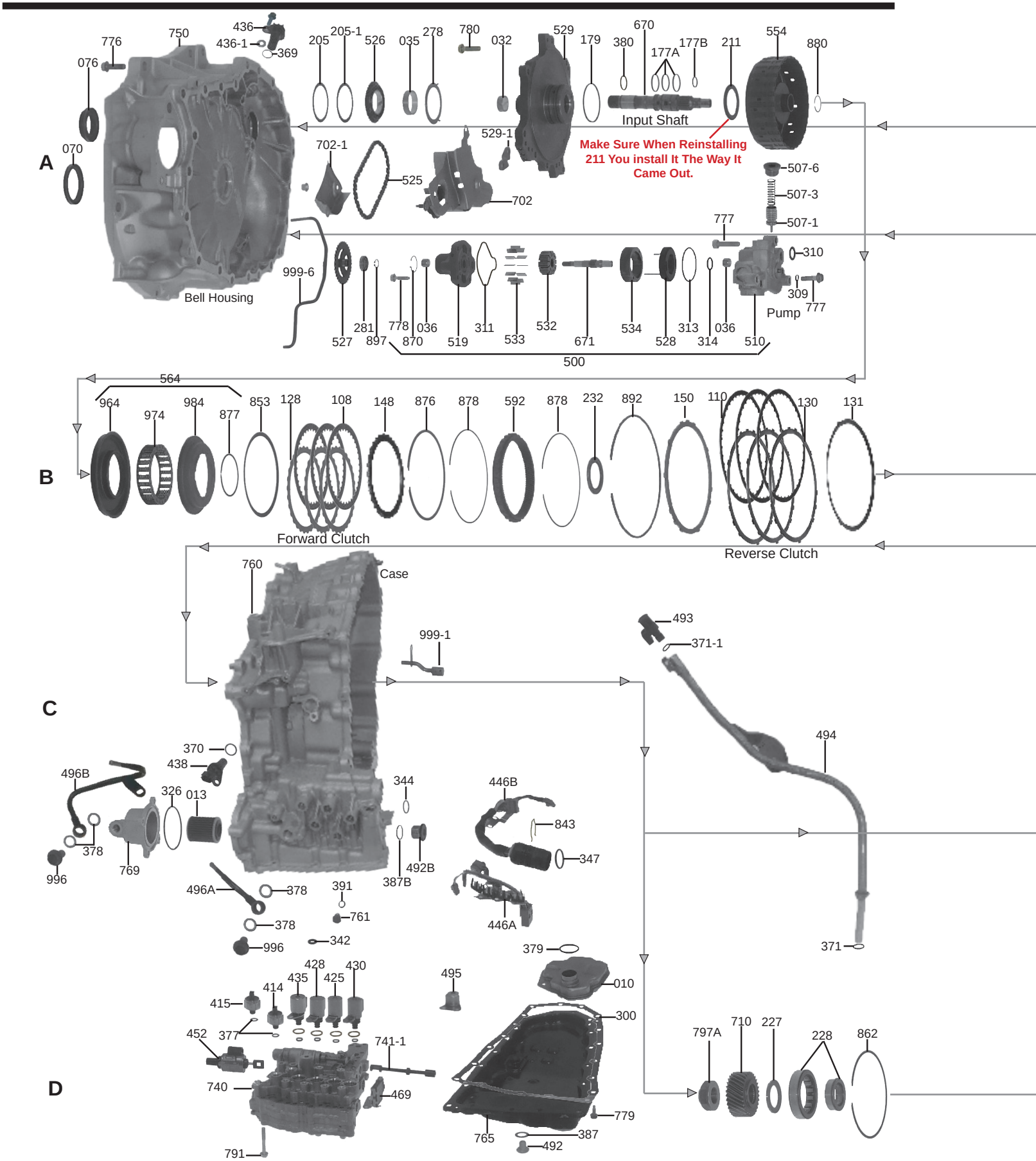

© 2017 Whatever It Takes Transmission Parts. Inc.

1-800-940-0197

RE0F10A (JF011E) (1XF / 1XT / 3UX)

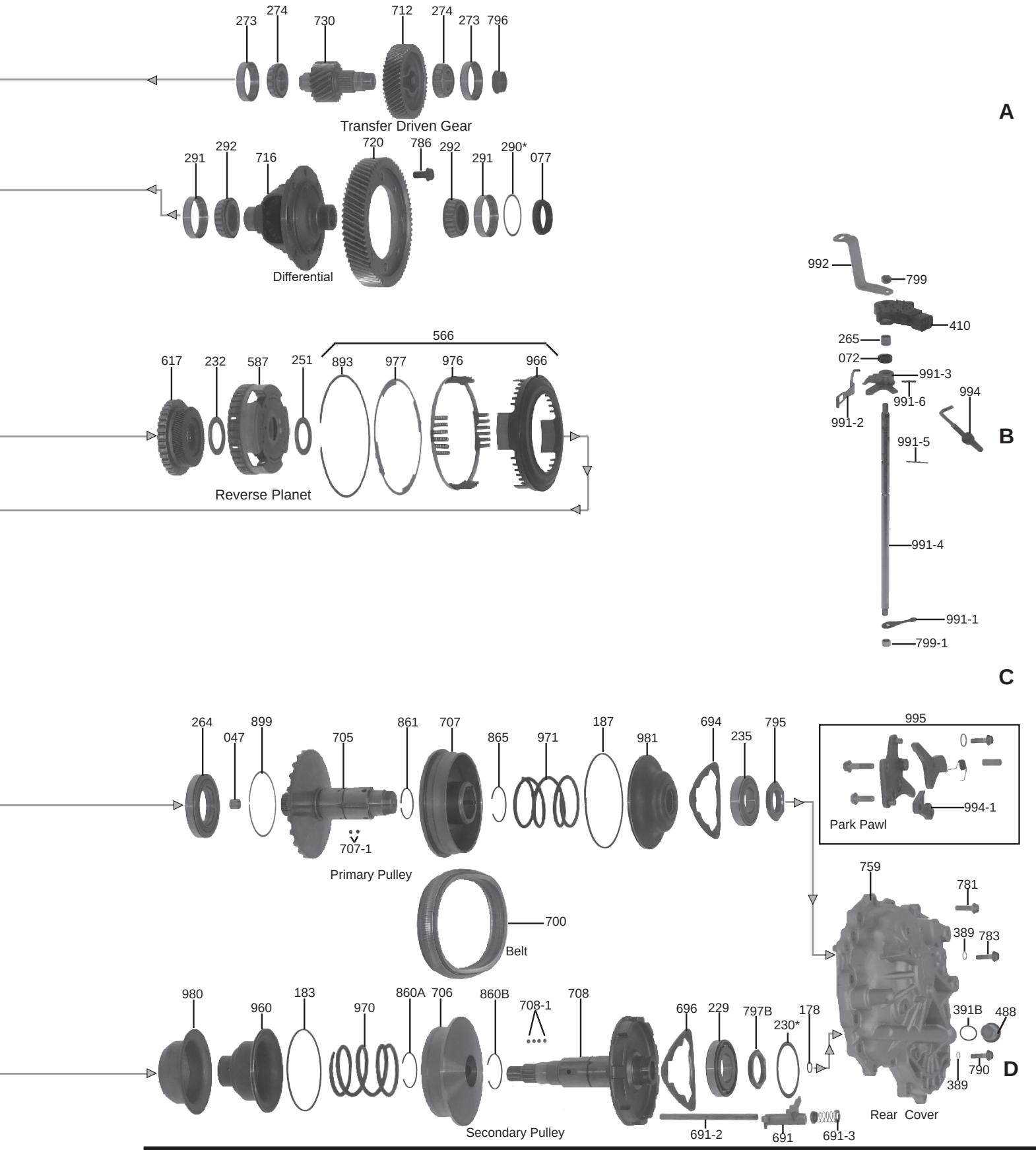

© 2017 Whatever It Takes Transmission Parts. Inc.

Off Axis Chain Driven Vane Style Pump

WIT # 212500A (2005-12)
 # 212500B (2013-Up)

The Flow Control Valve is very prone to wear.
Sonnax offers a Replacement Valve &
Oversized Valve to correct this issue.
WIT Part # S212507A-1 & S212507AA-1
Must be used with Reamer # T-F-33510B-TL
Also Available **WIT # T212507A-1**
Must Be Used With WIT # T-JF011E-PTK

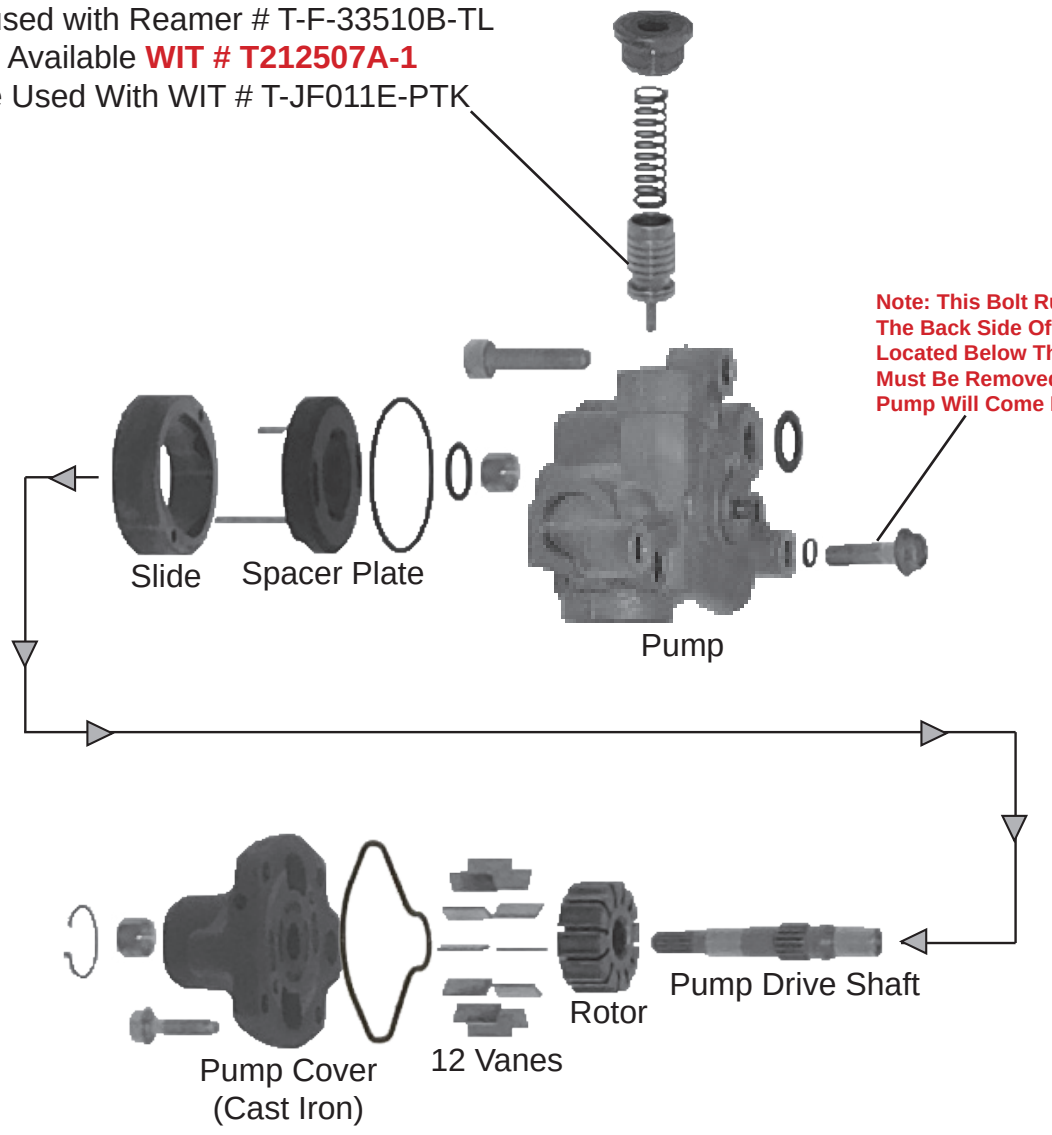

© 2017 Whatever It Takes Transmission Parts. Inc.

Pump Drive Sprocket

There are 2 Variations of the Pump Drive Sprocket. The 212526A has a lip where two 212205A spacers ride (See Figure 1) that go between the Pump Drive Sprocket and the Bell Housing. The 212526B has a flat shiny surface (See Figure 2) on both sides of the Drive Sprocket. This design does not use any spacers.

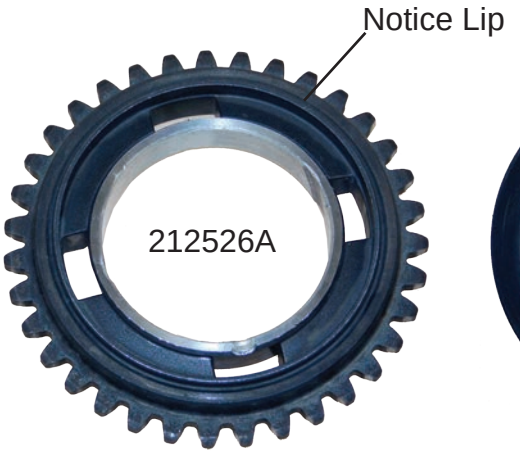

Figure 1

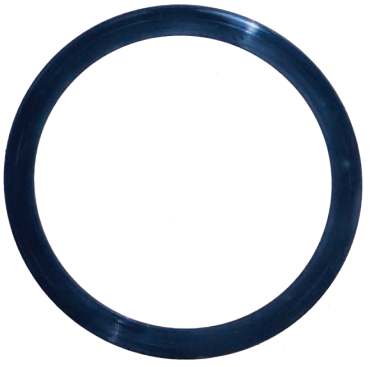

212205A

212205-1A

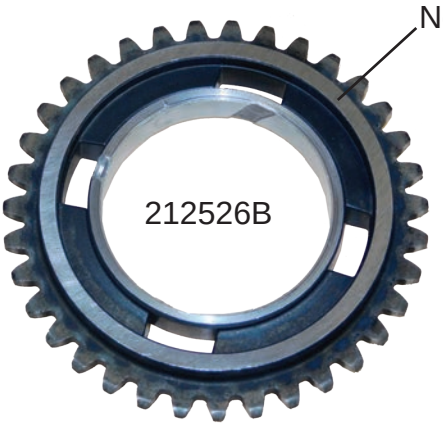

Figure 2

These Drive Sprockets are interchangeable, however, if you use the Drive Sprocket that has the lip, you **MUST** use the Spacers. If you use the Drive Sprocket with the shiny flat surface on both sides, the spacers are **NOT** to be used.

© 2017 Whatever It Takes Transmission Parts. Inc.

Converter Reactor & Forward Drum Bearing W/Races

Be careful when installing the bearing with races (#212211A) between the converter reactor (#212529A) and the forward drum (#212554A). If installed backward it will cause damage to the neck on the converter reactor (**Figure 1A**) and the inner race side of the bearing with races (**Figure 1B**). This will happen within 50 miles of the transmission being installed.

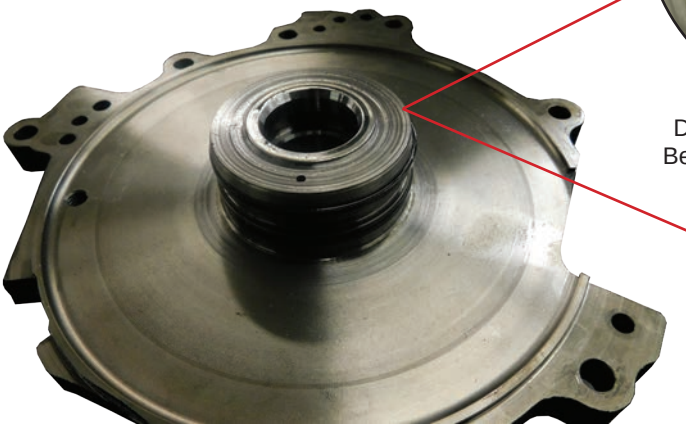

RE0F10A Converter Reactor (#212529A)

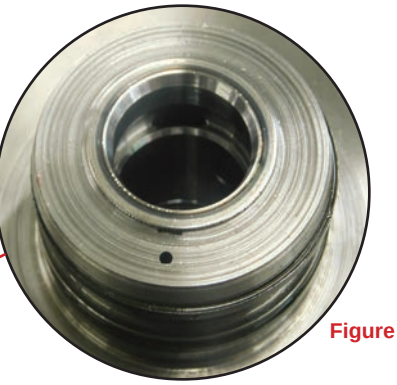

Figure 1A

Damage to Bearing Surface When Bearing With Race Is Installed in the Wrong Direction.

Figure 1B

This is damage to the Bearing W/Races (#212211A) when installed backward. It was installed so that the inner race side rode on the neck of the converter reactor. This side should have been installed so that it rides on the surface of the Forward Drum.

The Bearing W/Races (#212211A) should be installed in this position. The outer race side should be placed facing up inside the forward drum and the inner race side should be riding on the drum surface.

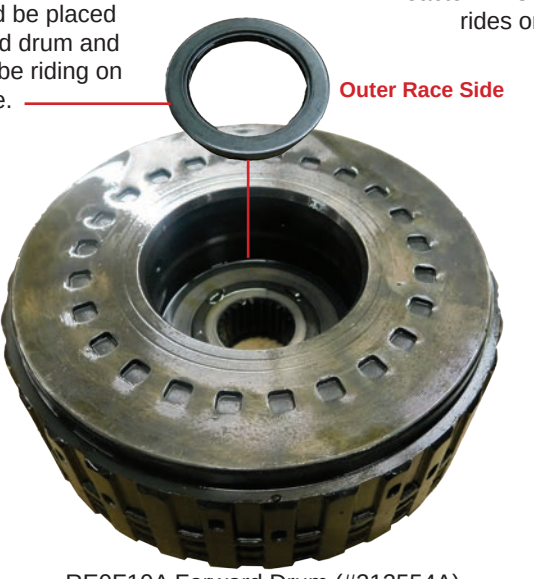

RE0F10A Forward Drum (#212554A)

© 2017 Whatever It Takes Transmission Parts. Inc.

1-800-940-0197

Pump Cover, Slide, Rotor, & Spacer Plate

When putting the pump components together, it is very important to make sure that the tabs on the spacer plate (#323528A) that go through the slide (#212534A) line up with the holes in the bottom of the pump cover (#212519A). If one or both of the tabs in the Spacer Plate line up with either the Suction or Pressure Ports in the Pump Cover, you will get a no pump pressure condition.

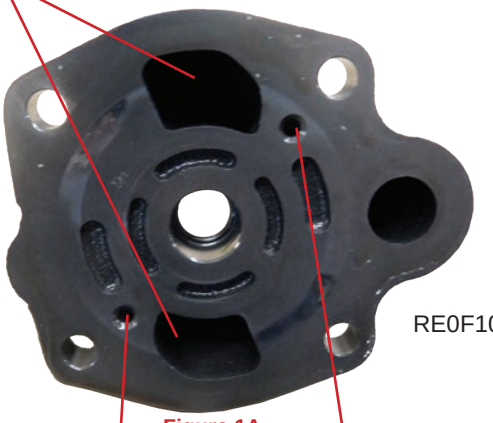

Figure 1A

It is very important to make sure that the tabs on the spacer plate (**Figure 1B**) are lined up and inserted correctly in the pump cover (**Figure 1A**).

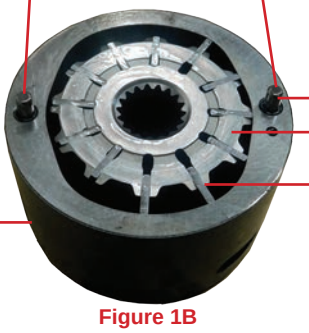

Figure 1B

RE0F10A Pump Slide (#212534A)
Pump Spacer Plate (323528A)
Pump Rotor (#212532A)
Pump Vanes (#212533A)

© 2017 Whatever It Takes Transmission Parts. Inc.

We have a dedicated production line for pumps, drums, planets, differentials, cases, shafts and a miscellaneous line that handles everything else, down to the smallest snap ring, washer and bearing.

WIT is the largest remanufacturer of transmission hard parts in the United States. All parts are thoroughly cleaned, polished and inspected for wear. New bushings, seals, o-rings and sealing rings are replaced when applicable. Some parts are bored and sleeved, while others are cut and fitted with oversized gears. All parts are remanufactured to meet or exceed OE specifications.

800-940-0197 | www.wittrans.com

WIT WHATEVER IT TAKES

TRANSMISSION PARTS, INC

Valve Body Solenoid Identification

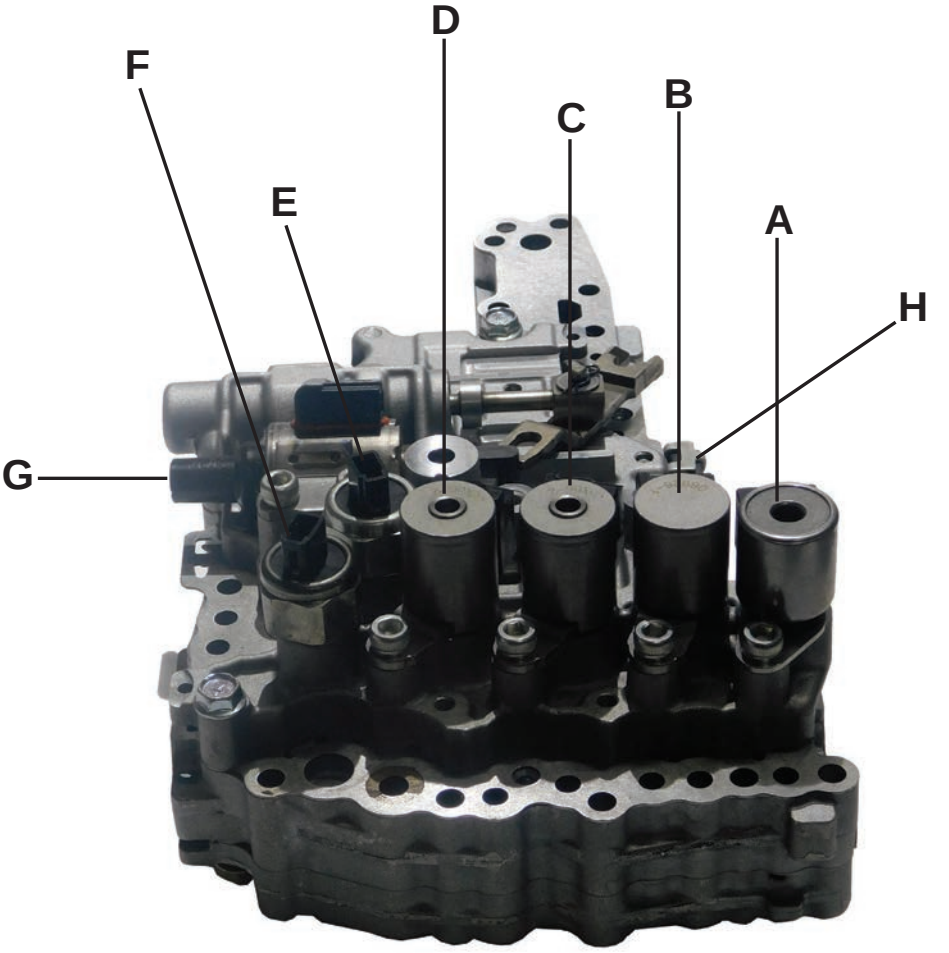

Alpha	Description	WIT Part #
	RE0F10A / RE0F10B Valve Body (W/Stepper Motor)(Cast # 1XF00, 1XF-L, 1XF-U) (4 Solenoids)(2 Pressure Switches) 2007-05/2012	212740A
	RE0F10A Valve Body (Nissan)(W/Stepper Motor)(4 Solenoids) (1 Pressure Switch) 05/2012-Up	212740AA
	RE0F10A Valve Body (Dodge)(W/Stepper Motor)(4 Solenoids) (2 Pressure Switches) 05/2012-Up	212740B
A	TCC Lock-Up Select Switch Solenoid	212430A
B	TCC Control Solenoid	212425A
C	Secondary Pressure Solenoid	203435A
D	Line Pressure Solenoid	203435A
E	Secondary Pressure Sensor	203414A
F	Primary Pressure Sensor	203414A
G	Ratio Control Motor (Stepper)	212452A
H	ROM Assembly	212469A
	Wire Harness	212446A / 212446B

© 2017 Whatever It Takes Transmission Parts. Inc.

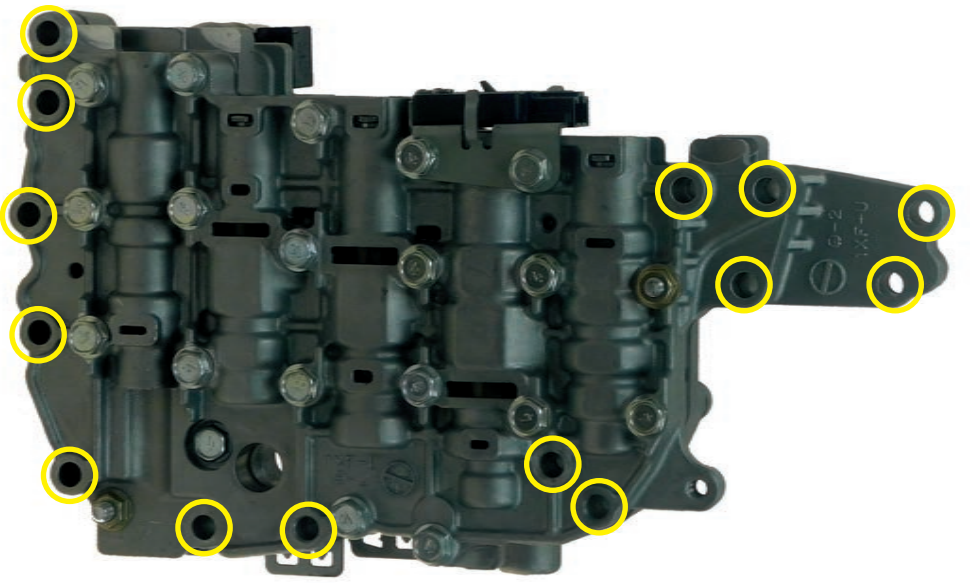

Remove These Bolts to Release Valve Body From The Case

Exploded Valve Body

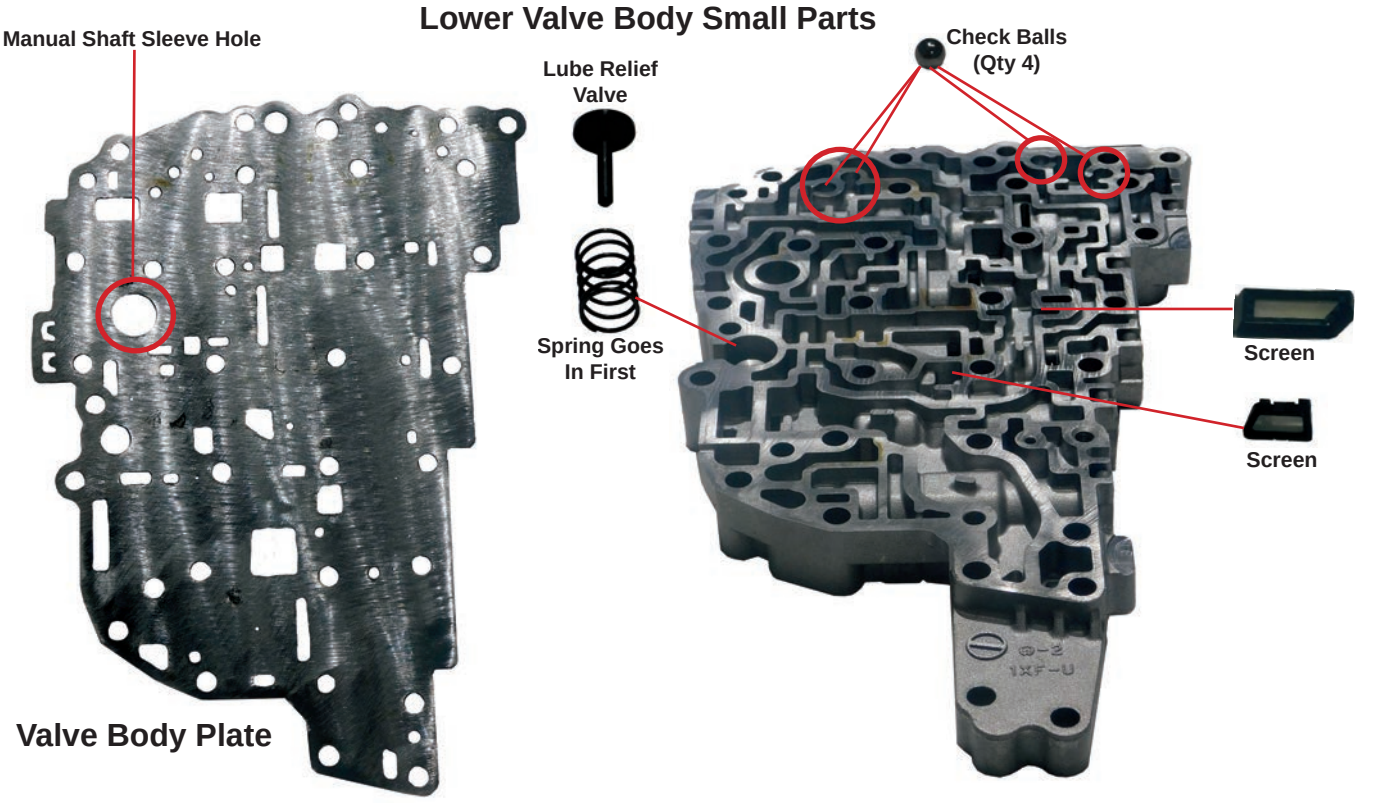

© 2017 Whatever It Takes Transmission Parts. Inc.

1-800-940-0197

RE0F10A (JF011E) (1XF / 1XT / 3UX)

Upper Valve Body

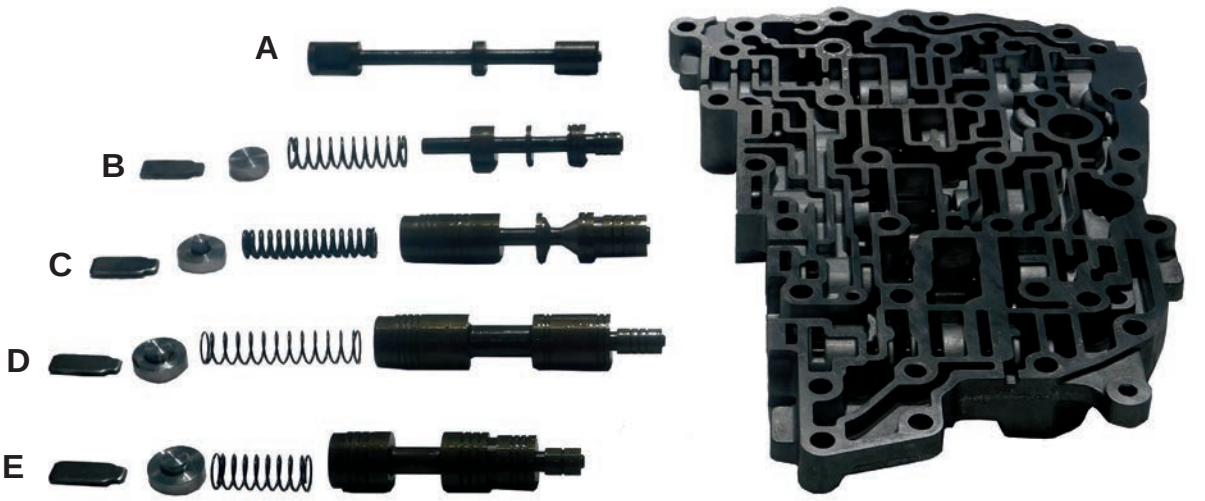

Alpha	Description	WIT Part #
A	Manual Valve	U212741-1A
B	TCC Limit & Lube Valve	S203741FOSK
C	TCC Regulator Valve	S212741CK
D	Primary Pressure Regulator Valve	S203741PK
E	Secondary Pressure Regulator Valve	N/A

Lower Valve Body

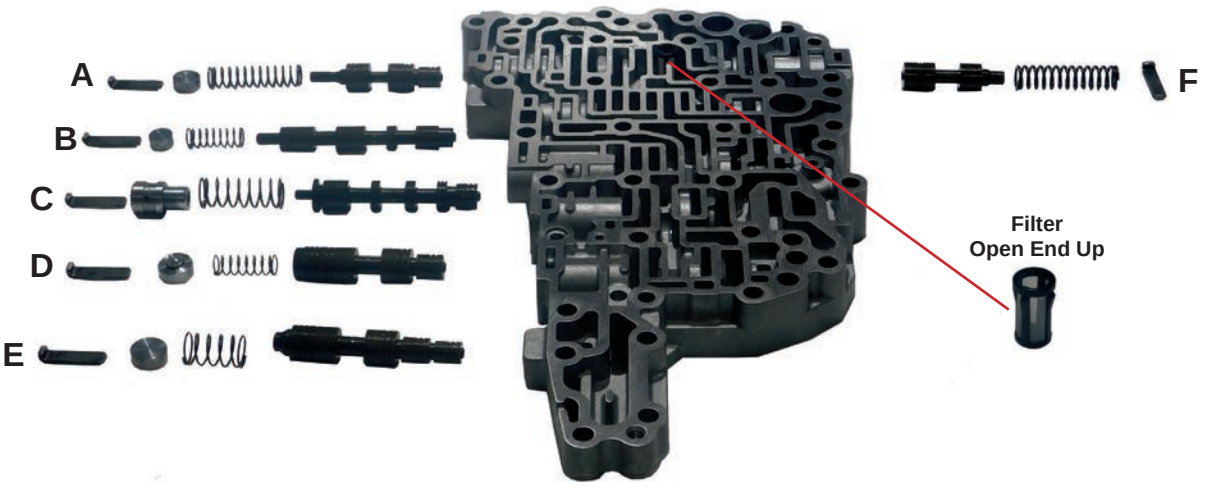

Alpha	Description	WIT Part #
A	Select Control Valve	N/A
B	Select Switch Valve	N/A
C	Lock-Up Control Valve	S203741CK / S212741COSK
D	Line Pressure Control Valve	N/A
E	Secondary PulleyControl Valve	S212741PK / S212741POSK
F	Pilot Valve (Controls Feed Pressure To All Solenoids)	S203741ALK

© 2017 Whatever It Takes Transmission Parts. Inc.

Primary Pulley

Note: During the disassembly with the TJ-1 two jaw puller, place the pulley assembly in a bucket to catch the steel balls.

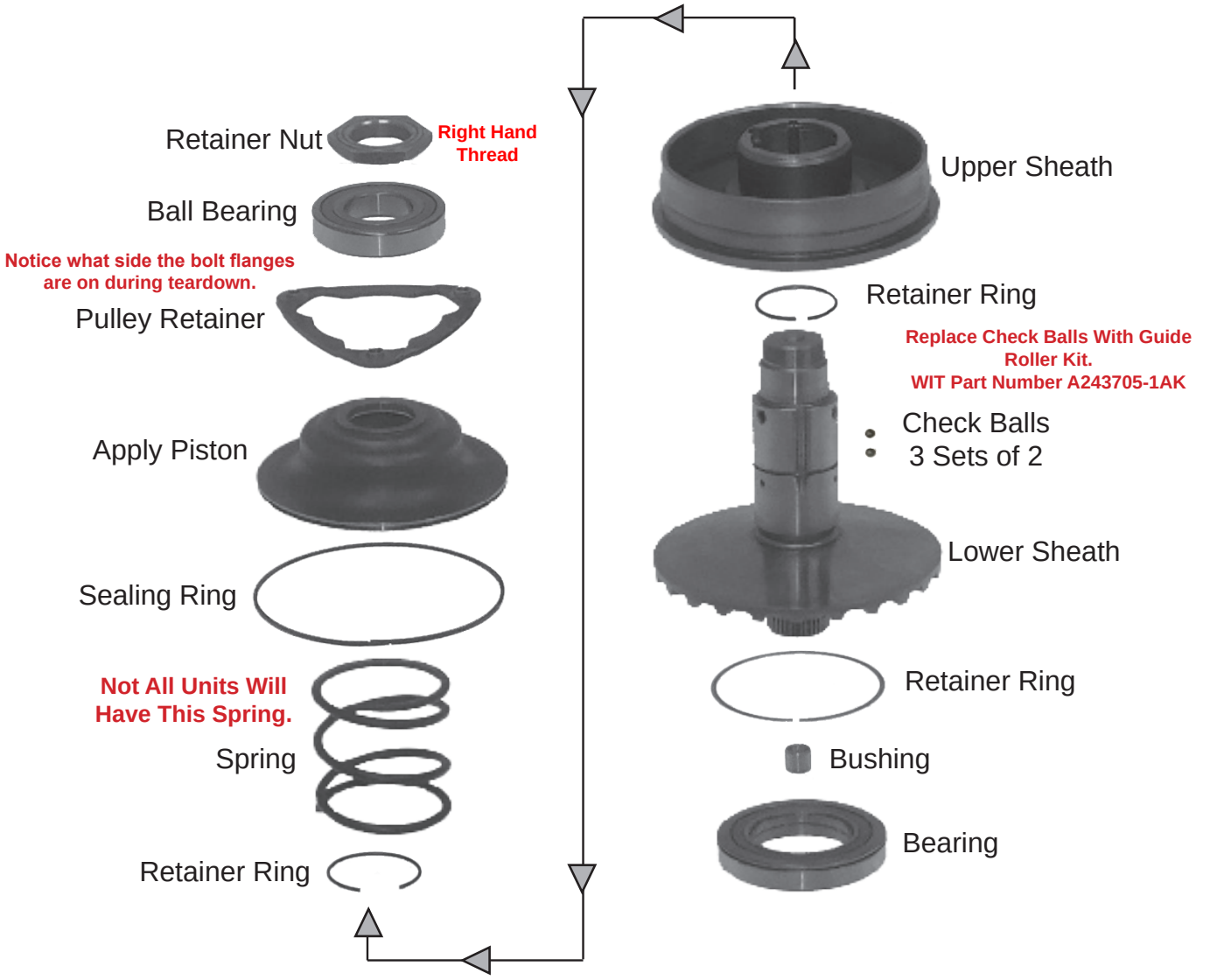

© 2017 Whatever It Takes Transmission Parts. Inc.

Secondary Pulley

Note: During the disassembly with the TJ-1 two jaw puller, place the pulley assembly in a bucket to catch the steel balls.

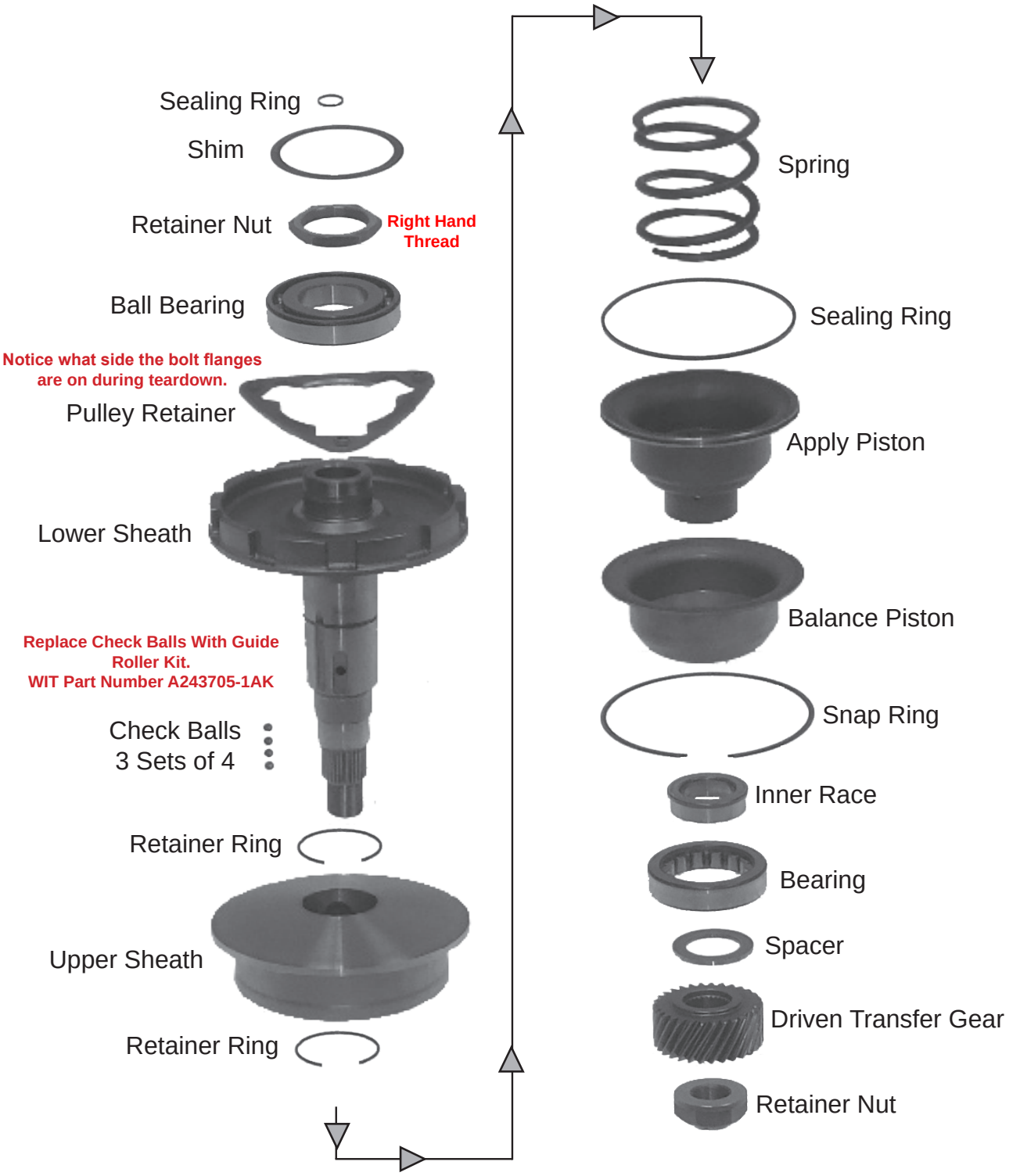

© 2017 Whatever It Takes Transmission Parts. Inc.

ATLANTIC

TORQUE CONVERTERS

PERFORMANCE CONVERTERS AVAILABLE

BUILDING PREMIUM TORQUE CONVERTERS THAT EXCEED OEM SPECIFICATIONS AND CUSTOMER EXPECTATIONS

OEM Replacement, Heavy-Duty and Performance Upgraded Torque Converters Available

- Superior Quality Products
- Exceptional Customer Service
- Unbeatable Value

CALL US TODAY

800-940-0197

WWW.WITTRANS.COM

RE0F10D Diagnostic Trouble Codes

DTC	Description
P0703	Brake Switch B
P0705	Transmission Range Sensor A
P0710	Transmission Fluid Temperature Sensor A
P0715	Input Speed Sensor A
P0720	Output Speed Sensor
P0725	Engine Speed
P0740	Torque Converter
P0744	Torque Converter
P0745	Pressure Control Solenoid A
P0746	Pressure Control Solenoid A
P0776	Pressure Control Solenoid B
P0778	Pressure Control Solenoid B
P0840	Transmission Fluid Pressure Sensor/Switch A
P0841	Transmission Fluid Pressure Sensor/Switch A
P0868	Transmission Fluid Pressure
P1701	TCM
P1705	Temperature Sensor
P1709	Incompleted Data Writing
P1722	Vehicle Speed
P1723	Speed Sensor
P1726	Throttle Control Signal
P1740	Select Solenoid
P1777	Stepper Motor
P1778	Stepper Motor
U0100	Lost Communication (ECM A)
U1000	CAN Communication Circuit
U1010	Control Unit (CAN)

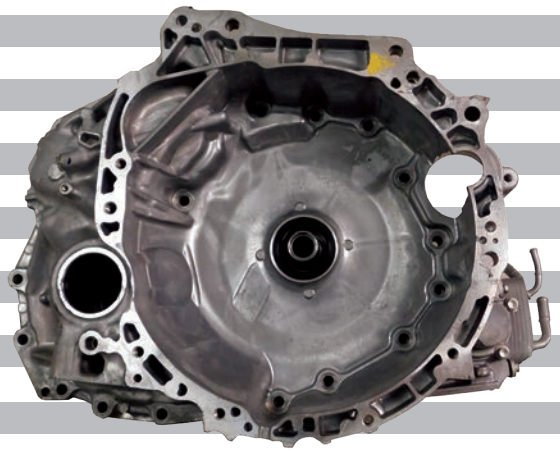

RE0F10D (2.5L)

© 2017 Whatever It Takes Transmission Parts. Inc.

RE0F10D (JF016E) 3VX0A / 3VX0C

CVT FWD

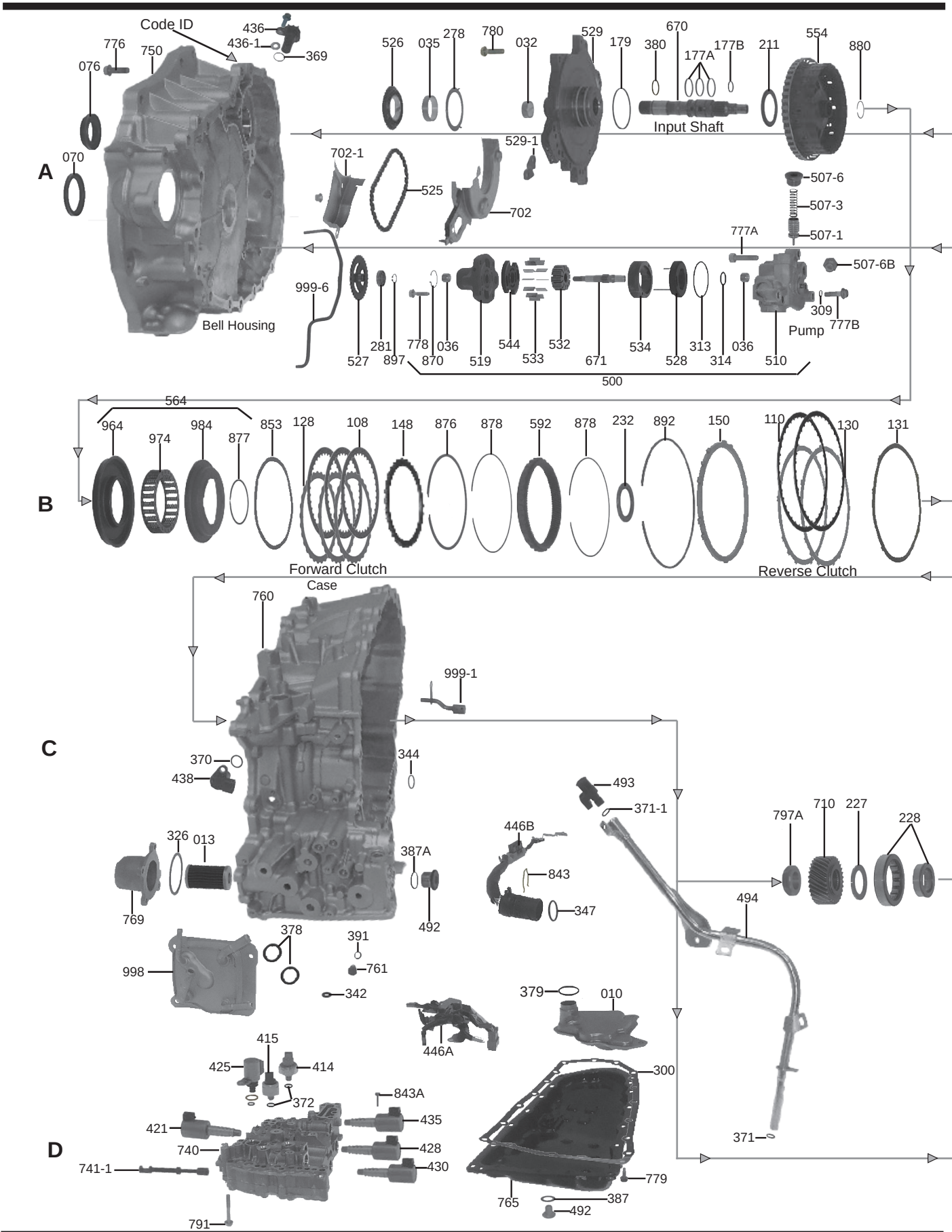

© 2017 Whatever It Takes Transmission Parts. Inc.

RE0F10D (JF016E) 3VX0A / 3VX0C

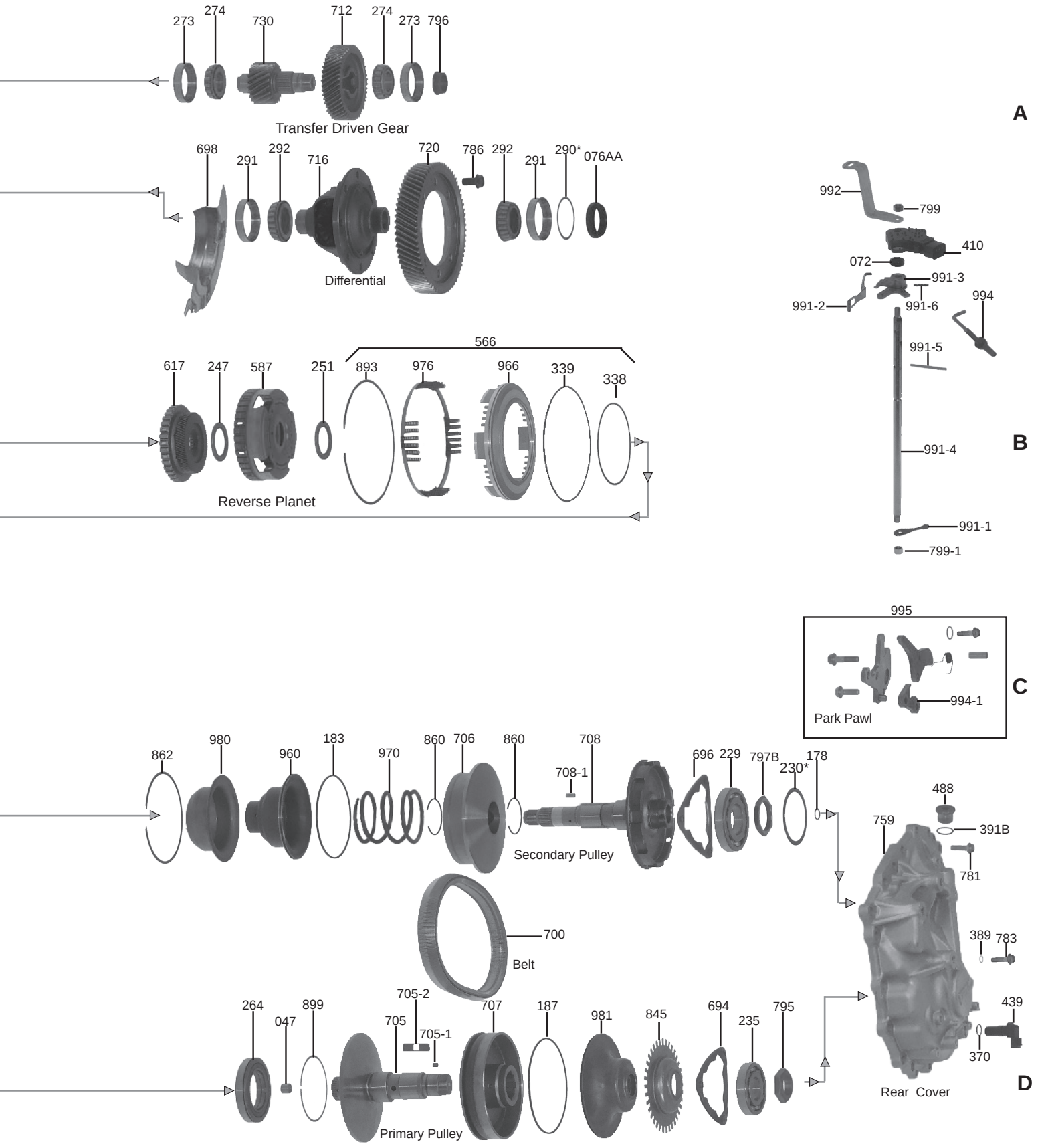

© 2017 Whatever It Takes Transmission Parts. Inc.

Off Axis Chain Driven Vane Style Pump

WIT # 333500A

The Flow Control Valve is very prone to wear.
Sonnax offers a Replacement Valve &
Oversized Valve to correct this issue.
WIT Part # S212507A-1 & S212507AA-1
Must be used with Reamer # T-F-33510B-TL

Note: This Bolt Runs Through The Back Side Of The Case Located Below The Axle Seal. Must Be Removed Before The Pump Will Come Loose.

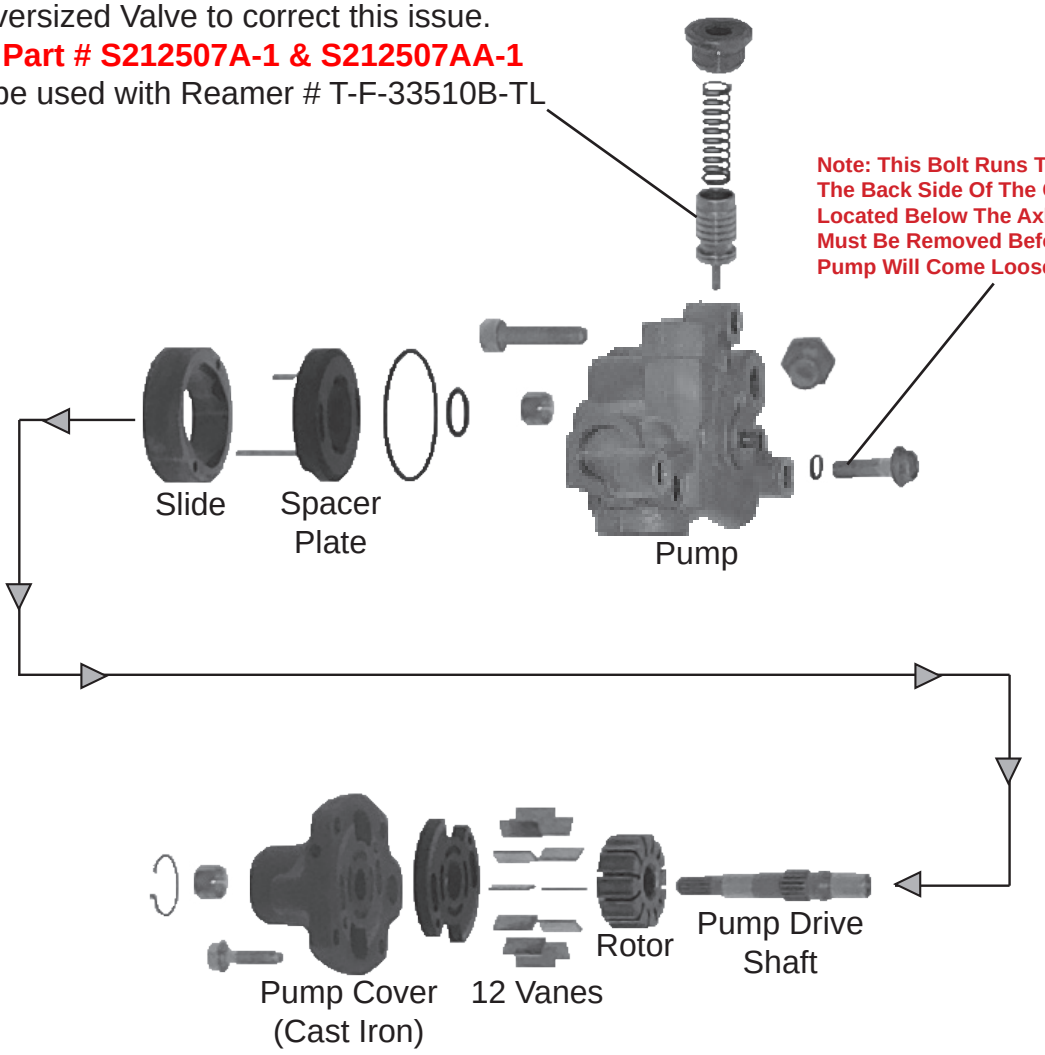

© 2017 Whatever It Takes Transmission Parts. Inc.

Valve Body Solenoid Identification

Does Not Use A Ratio Control Motor Or ROM Assembly

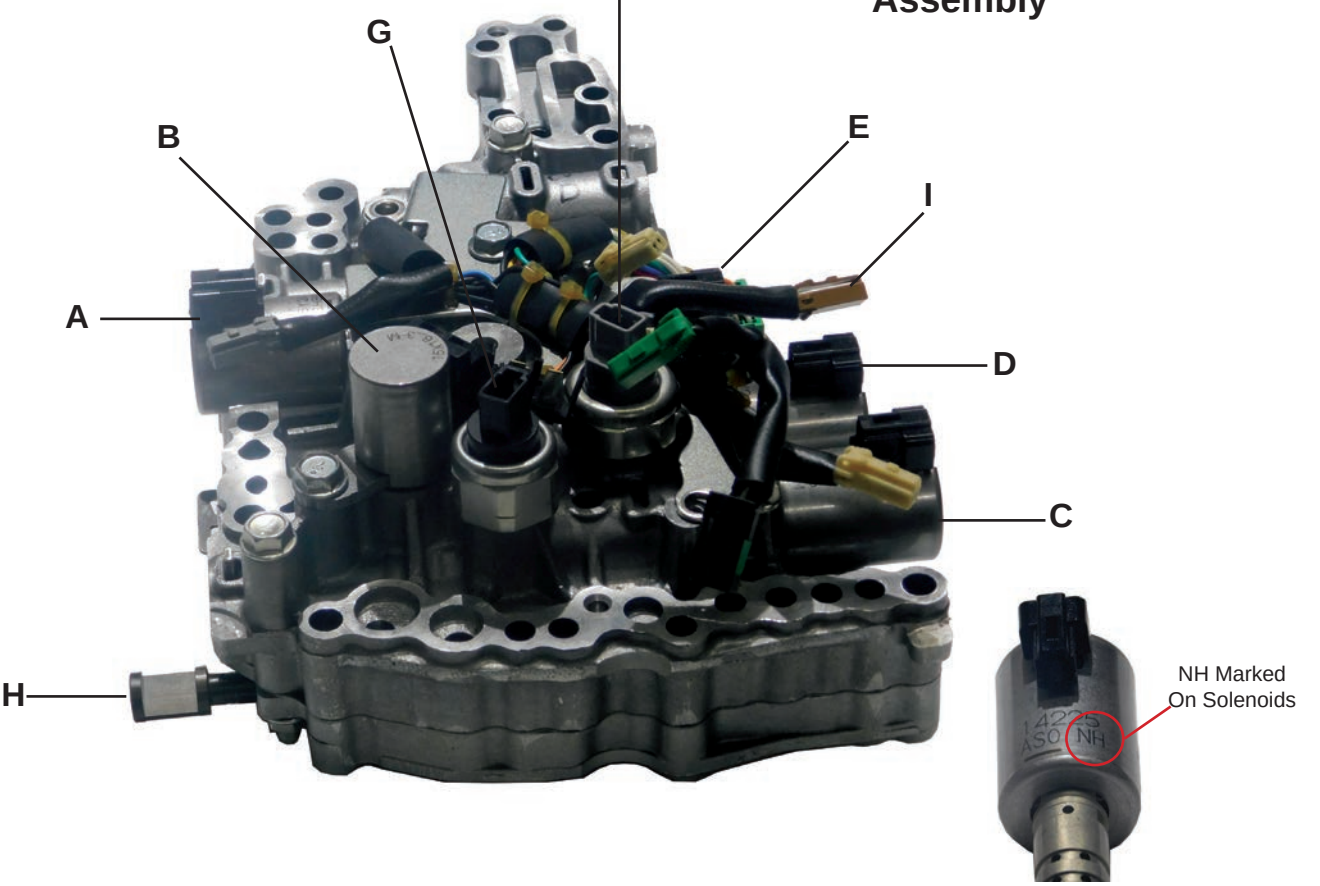

Alpha	Description	WIT Part #
	RE0F10D (JF016E) Valve Body (Cast # ARO M2B) 2013-Up	333740A
A	Primary Pressure Solenoid	333421A
B	TCC Control Solenoid	333425A
C	Select Solenoid	333430A
D	Line Pressure Solenoid	333428A
E	Secondary Pressure Solenoid	333435A
F	Secondary Pressure Sensor	203414A
G	Primary Pressure Sensor	203414A
H	Manual Valve	333741-1A
I	Wire Harness W/Fluid Temperature Sensor	333446A / 333446B

New Generation CVT8 Units Elimated the Stepper Motor in Exchange For PWM Pressure Controlled Solenoids In The Valve Body

© 2017 Whatever It Takes Transmission Parts. Inc.

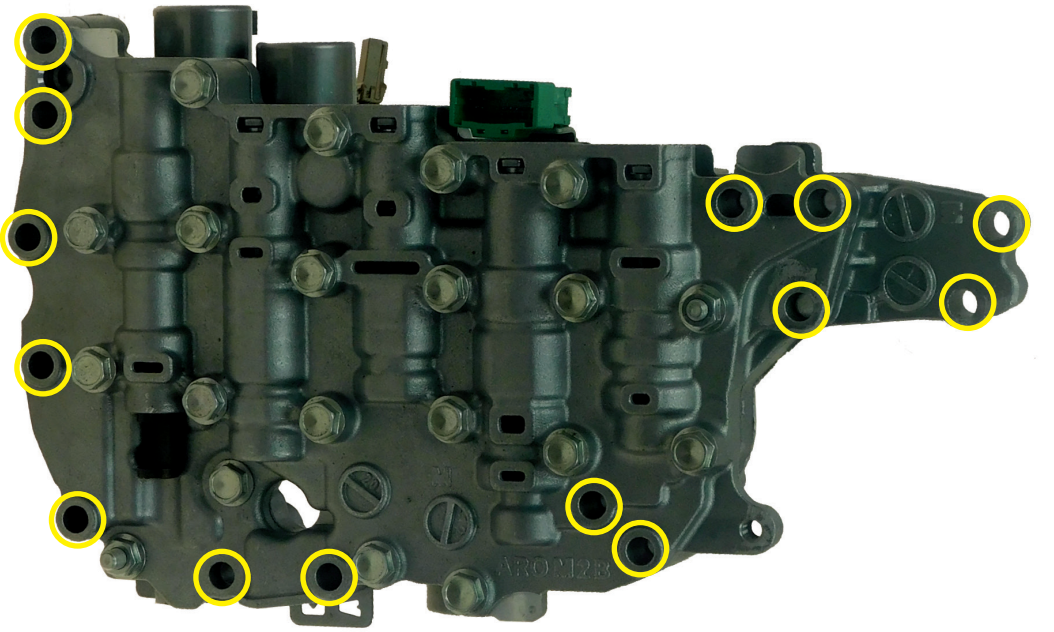

Remove These Bolts to Release Valve Body From The Case

Exploded Valve Body

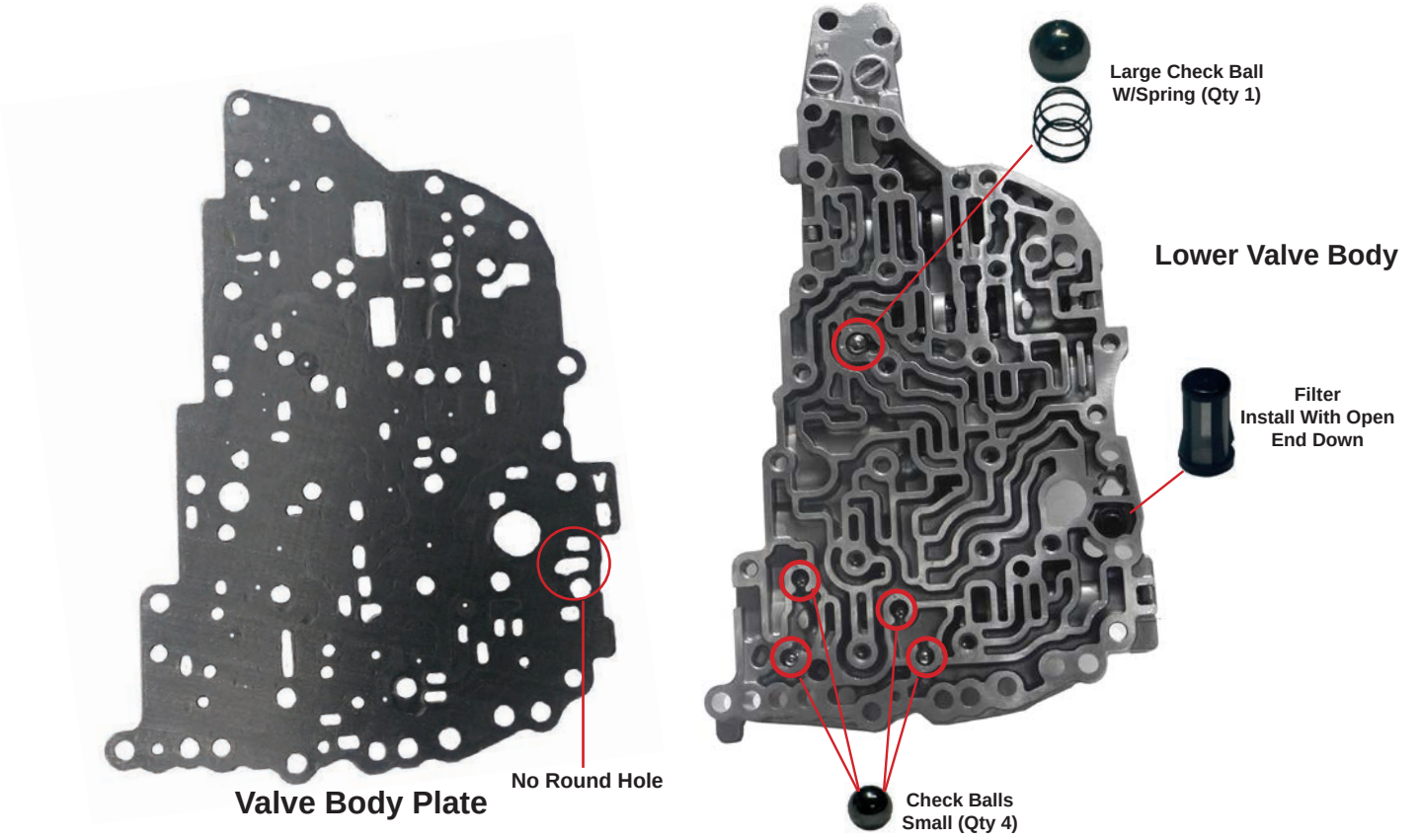

© 2017 Whatever It Takes Transmission Parts. Inc.

1-800-940-0197

Upper Valve Body

Alpha	Description	WIT Part #
A	Secondary Reducing Valve	N/A
B	Pressure Regulating Valve	N/A
C	TCC Regulating Valve	N/A
D	TCC Control Valve	N/A

Lower Valve Body

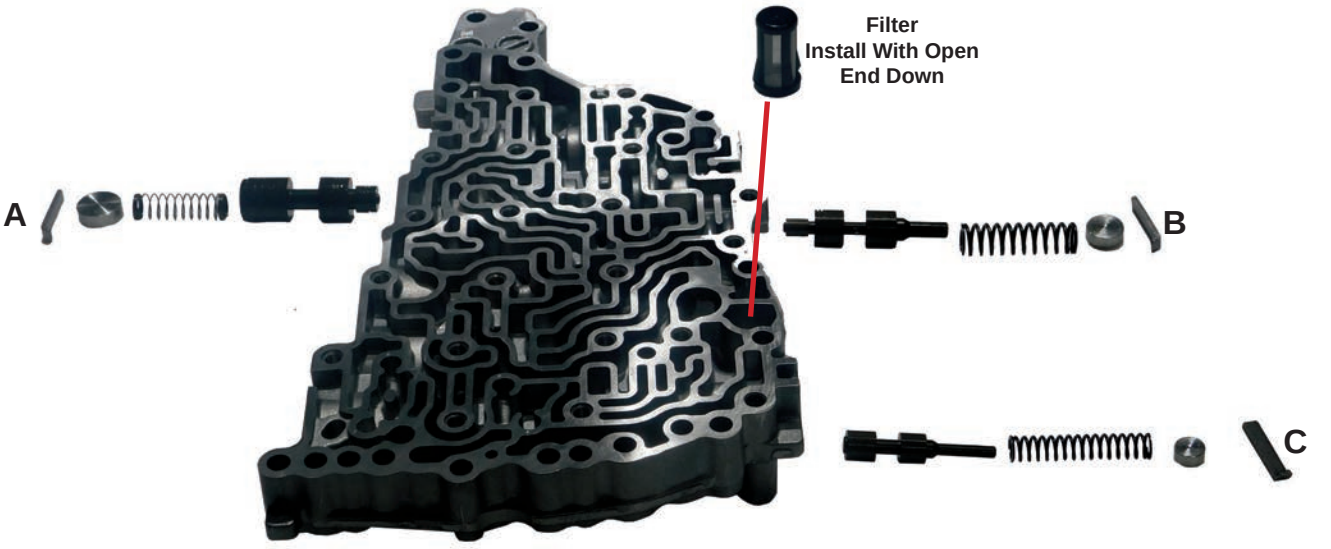

Alpha	Description	WIT Part #
A	Primary Reducing Valve	N/A
B	Pilot (Solenoid Modulating) Valve A	N/A
C	Pilot (Torque Converter) Valve B	N/A

© 2017 Whatever It Takes Transmission Parts. Inc.

Primary Pulley

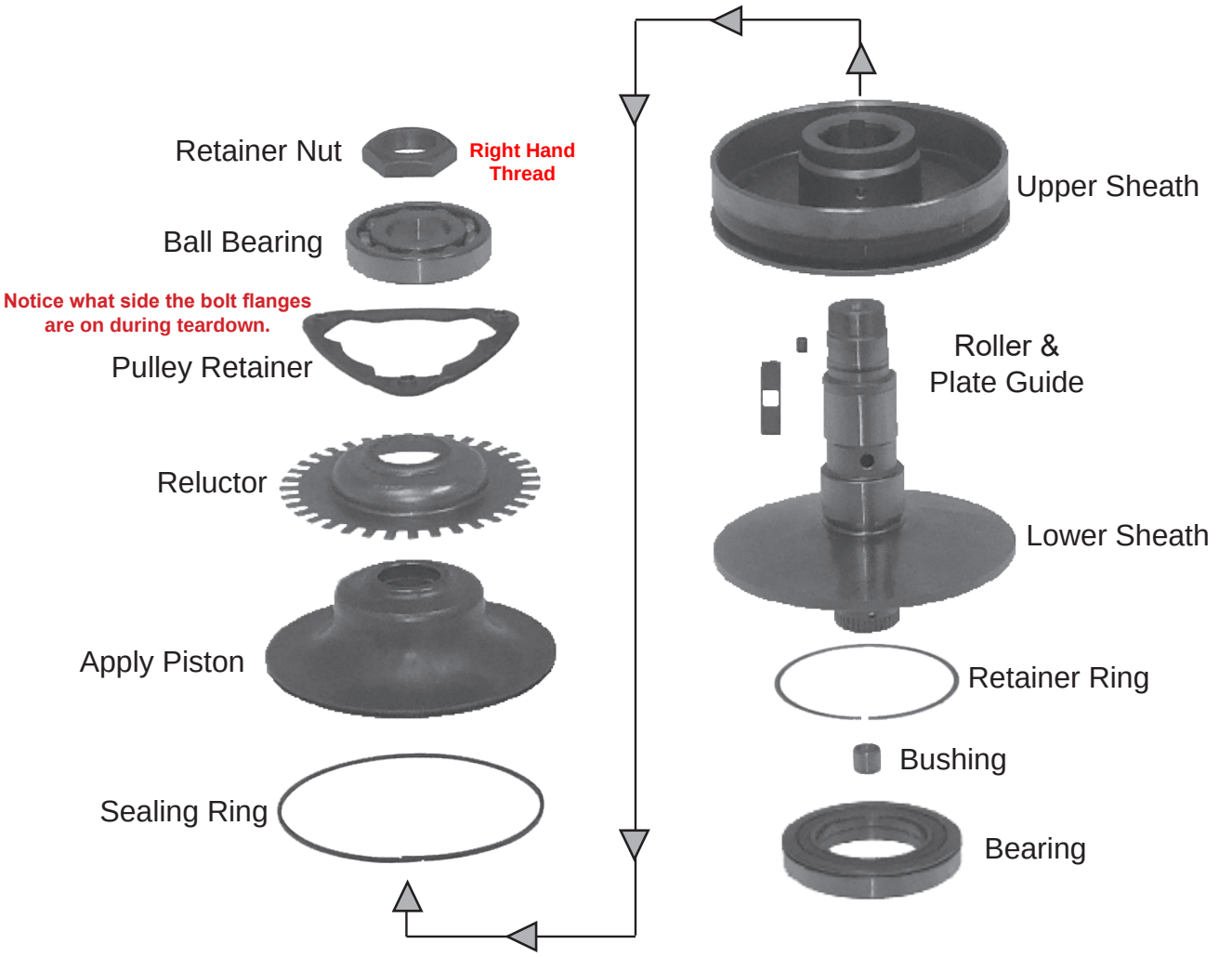

© 2017 Whatever It Takes Transmission Parts. Inc.

1-800-940-0197

Secondary Pulley

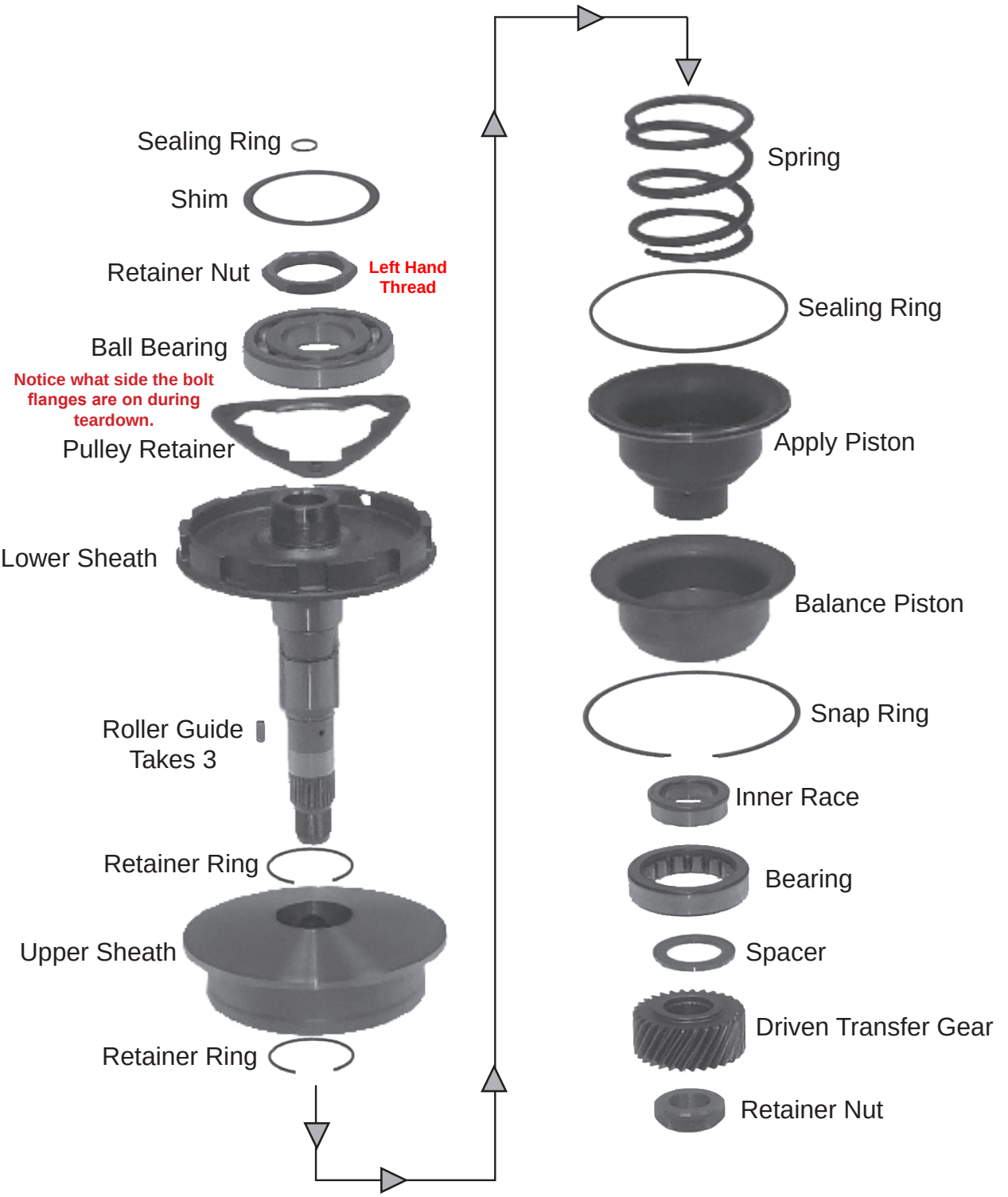

© 2017 Whatever It Takes Transmission Parts. Inc.

“New Generation” CVT8 Reverse Piston

The differences in the Reverse Piston is easy to identify by looking at the snap ring location. The RE0F10D has the snap ring on the outside edge of the Reverse Piston and Spring Cage.

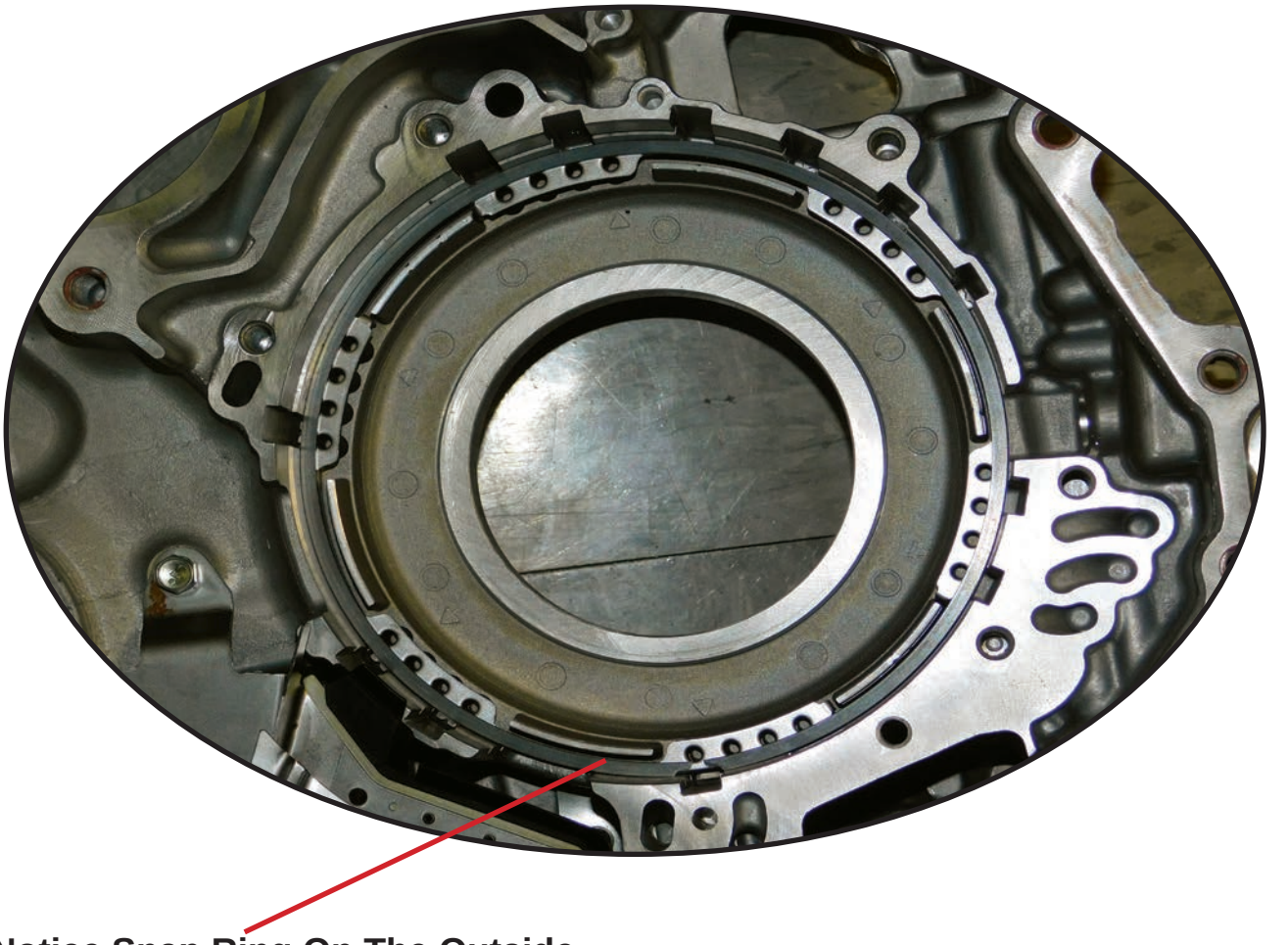

Notice Snap Ring On The Outside Of The Spring Cage

© 2017 Whatever It Takes Transmission Parts. Inc.

1-800-940-0197

RE0F10E Diagnostic Trouble Codes

DTC	Description
P062F	EEPROM
P0705	Transmission Range Sensor A
P0706	Transmission Range Sensor A
P0711	Transmission Fluid Temperature Sensor A
P0712	Transmission Fluid Temperature Sensor A
P0713	Transmission Fluid Temperature Sensor A
P0715	Input Speed Sensor A
P0717	Input Speed Sensor A
P0740	Torque Converter
P0743	Torque Converter
P0744	Torque Converter
P0746	Pressure Control Solenoid A
P0776	Pressure Control Solenoid B
P0778	Pressure Control Solenoid B
P0779	Pressure Control Solenoid B
P0841	Transmission Fluid Pressure Sensor/Switch A
P0847	Transmission Fluid Pressure Sensor/Switch B
P0848	Transmission Fluid Pressure Sesnor/Switch B
P084C	Transmission Fluid Pressure Sensor/Switch H
P084D	Transmission Fluid Pressure Sensor/Switch H
P0863	TCM Communication
P0890	TCM
P0962	Pressure Control Solenoid A
P0963	Pressure Control Solenoid A
P0965	Pressure Control Solenoid B
P0966	Pressure Control Solenoid B
P0967	Pressure Control Solenoid B
P2765	Input Speed Sensor B
P2813	Select Solenoid
P2814	Select Solenoid
P2815	Select Solenoid
U0073	Communication Bus A Off
U0100	Lost Communication (ECM A)
U0102	Lost Communication (Transfer)
U0140	Lost Communication (BCM)
U0141	Lost Communication (BCM A)
U0155	Lost Communication (IPC)
U0300	Can Communication Data
U1000	Can Communication Circuit
U1117	Lost Communication (ABS)

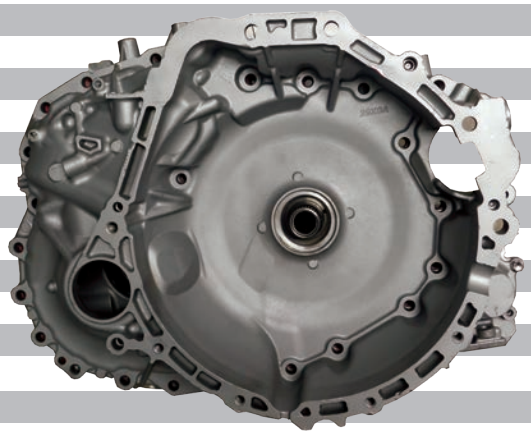

RE0F10E/H/J (3.5L)

© 2017 Whatever It Takes Transmission Parts. Inc.

RE0F10E (JF017E) 3WX0

CVT FWD

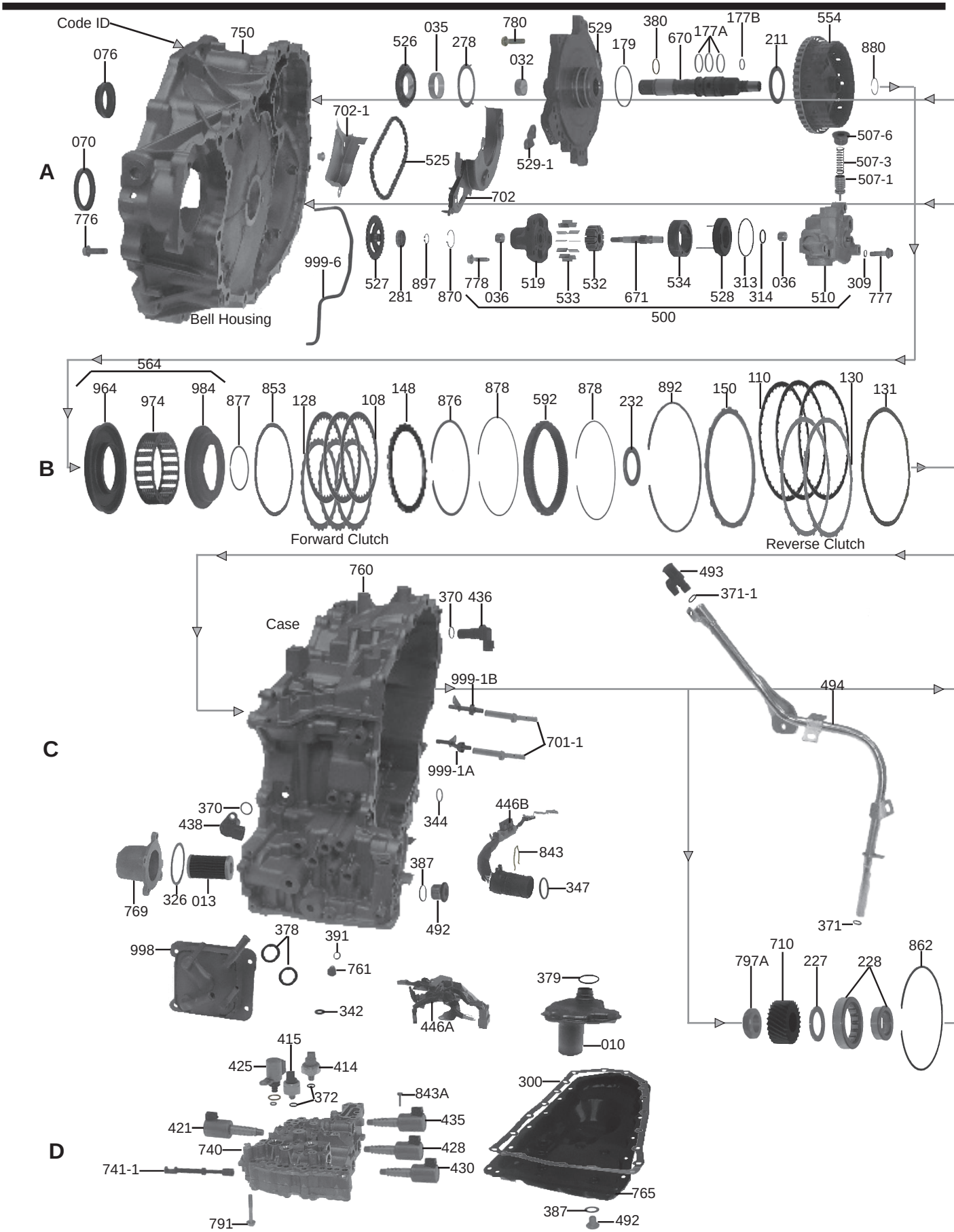

© 2017 Whatever It Takes Transmission Parts. Inc.

RE0F10E (JF017E) 3WX0

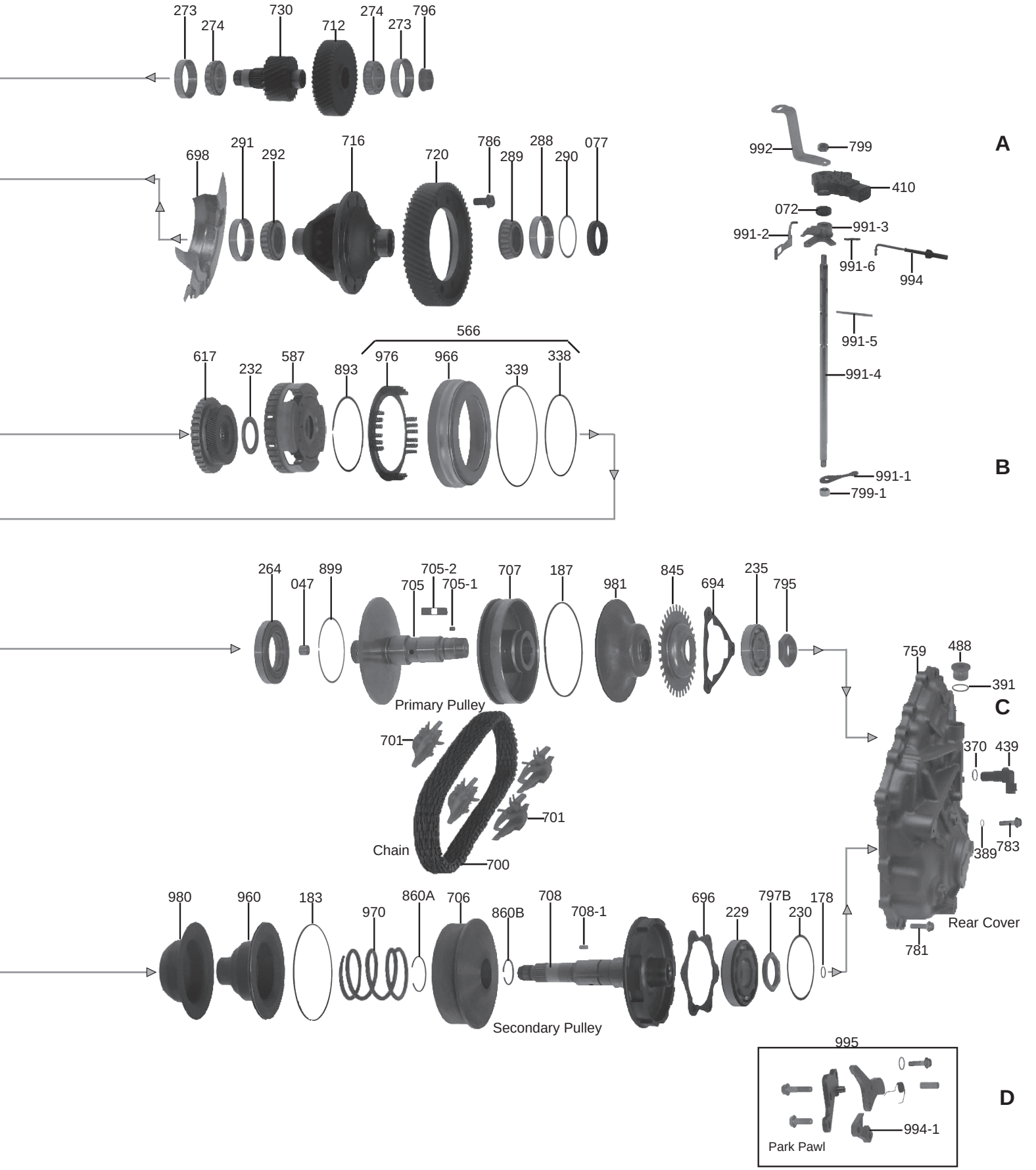

© 2017 Whatever It Takes Transmission Parts. Inc.

Off Axis Chain Driven Vane Style Pump

WIT # 212500A

The Flow Control Valve is very prone to wear.
Sonnax offers a Replacement Valve &
Oversized Valve to correct this issue.
WIT Part # S212507A-1 & S212507AA-1
Must be used with Reamer # T-F-33510B-TL
Also Available **WIT # T212507A-1**
Must Be Used With WIT # T-JF011E-PTK

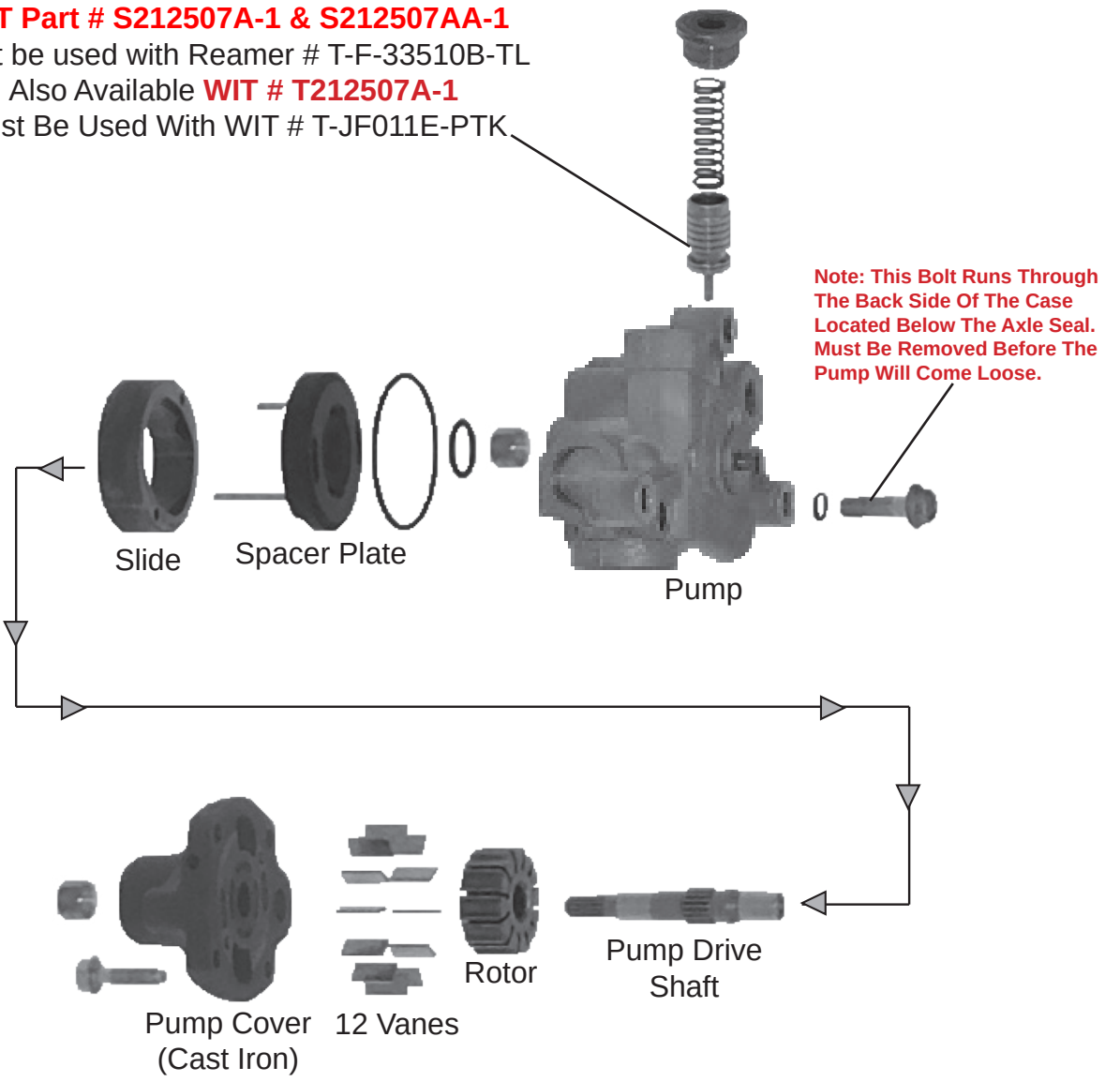

© 2017 Whatever It Takes Transmission Parts. Inc.

1-800-940-0197

Valve Body Solenoid Identification

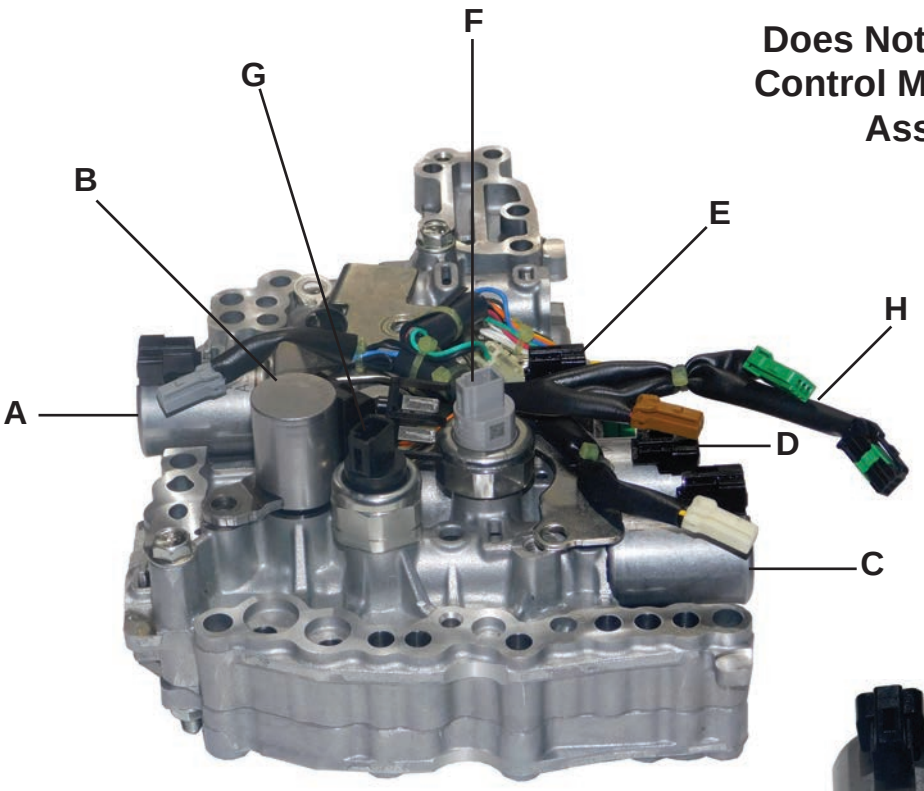

Does Not Use A Ratio Control Motor Or ROM Assembly

NH Marked On Solenoids

Alpha	Description	WIT Part #
	Valve Body RE0F10E (Cast # ARO MB2) 2013-Up	333740A
A	Primary Pressure Solenoid	333421A
B	TCC Control Solenoid	333425A
C	Select Solenoid	333430A
D	Line Pressure Solenoid	333428A
E	Secondary Pressure Solenoid	333435A
F	Secondary Pressure Sensor	203414A
G	Primary Pressure Sensor	203414A
H	Wire Harness W/Fluid Temperature Sensor	333446A / 333446B

New Generation CVT8 Units Elimated the Stepper Motor in Exchange For PWM Pressure Controlled Solenoids In The Valve Body

© 2017 Whatever It Takes Transmission Parts. Inc.

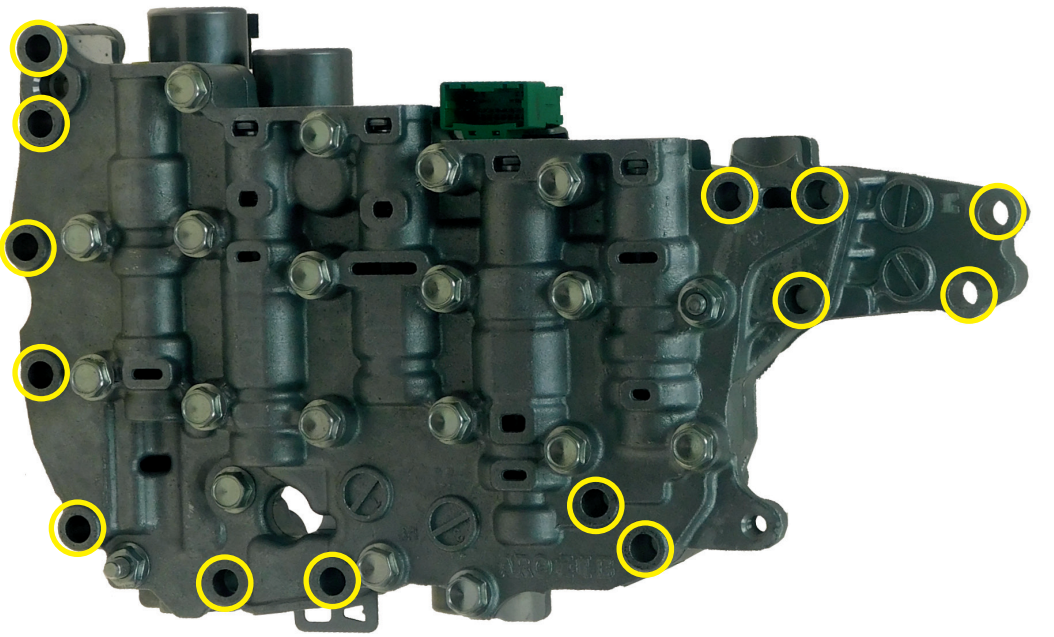

Remove These Bolts to Release Valve Body From The Case

Exploded Valve Body

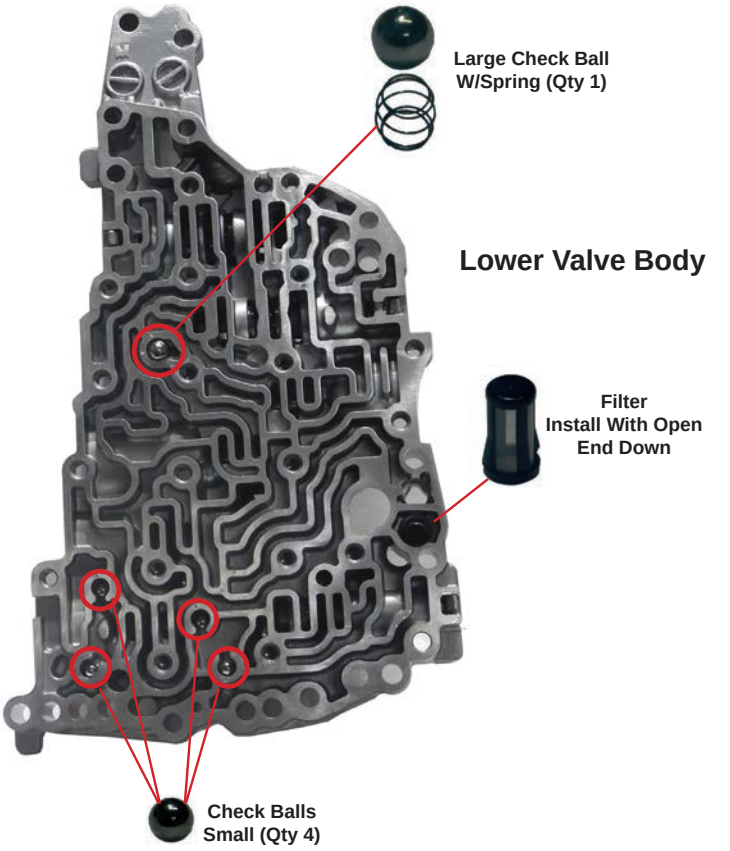

© 2017 Whatever It Takes Transmission Parts. Inc.

Upper Valve Body

Alpha	Description	WIT Part #
A	Secondary Reducing Valve	N/A
B	Pressure Regulating Valve	N/A
C	TCC Regulating Valve	N/A
D	TCC Control Valve	N/A

Lower Valve Body

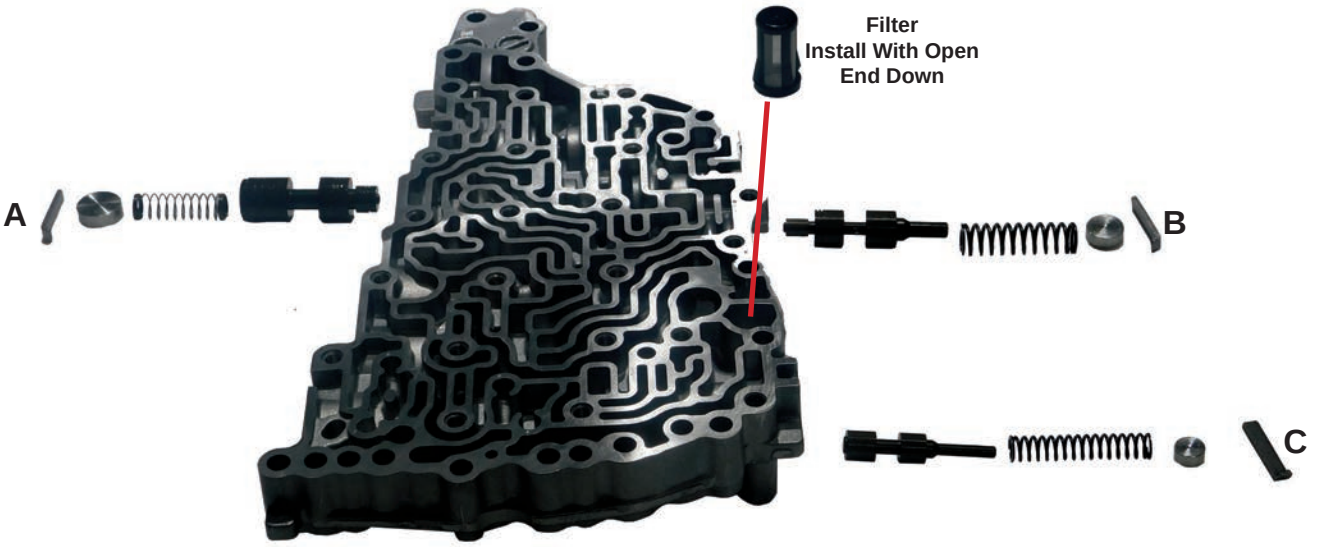

Alpha	Description	WIT Part #
A	Primary Reducing Valve	N/A
B	Pilot (Solenoid Modulating) Valve A	N/A
C	Pilot (Torque Converter) Valve B	N/A

© 2017 Whatever It Takes Transmission Parts. Inc.

Primary Pulley

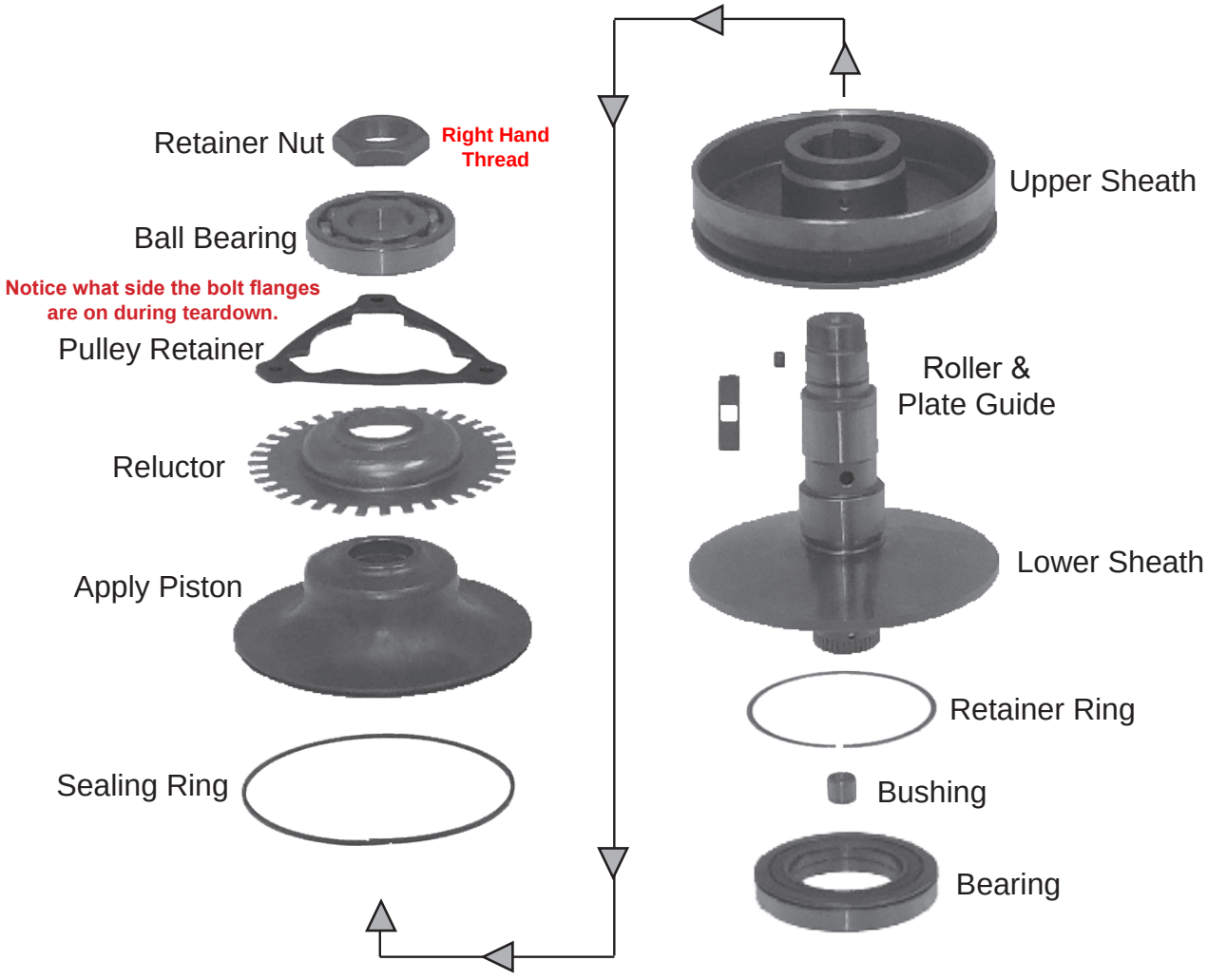

© 2017 Whatever It Takes Transmission Parts. Inc.

1-800-940-0197

Secondary Pulley

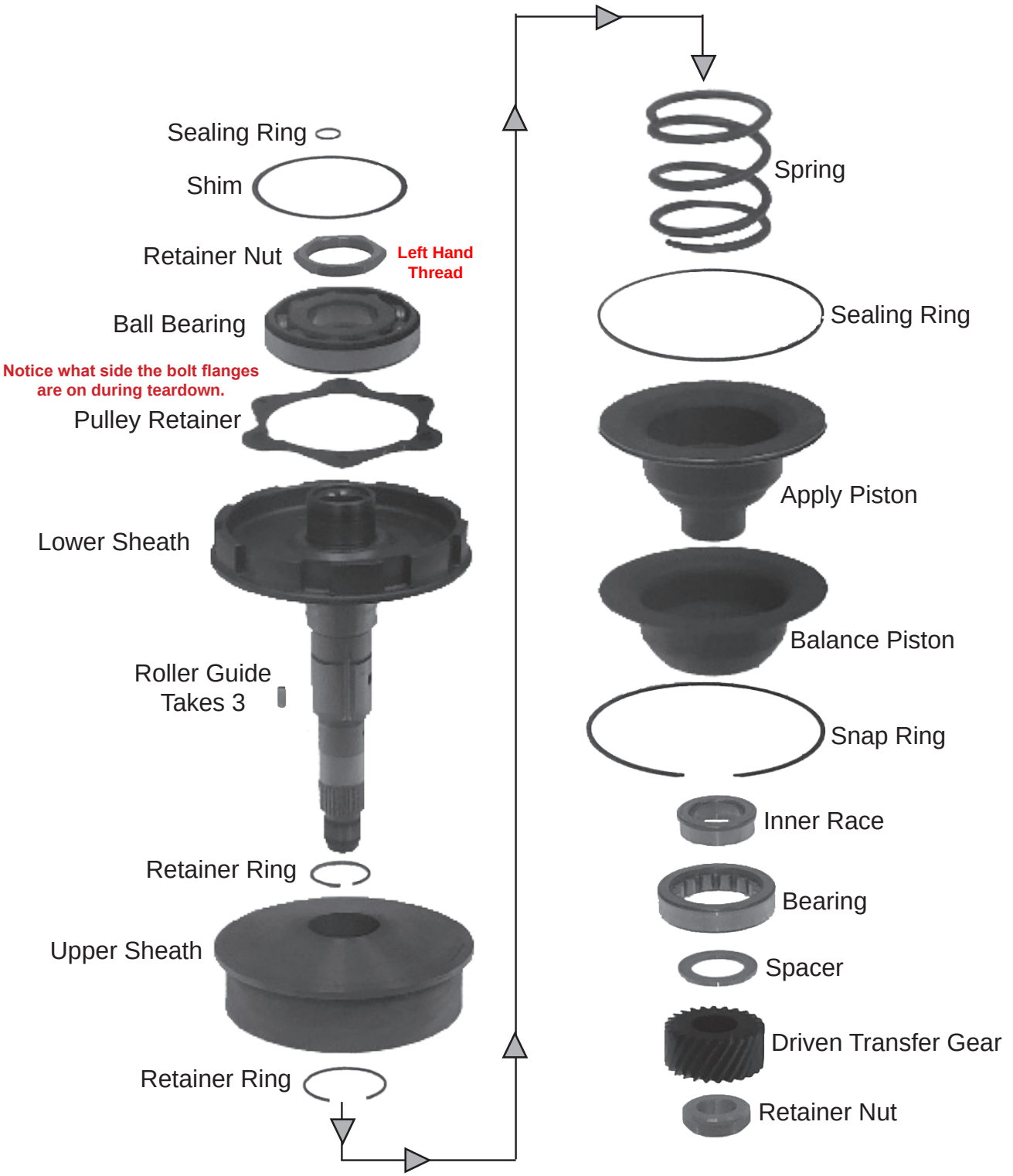

© 2017 Whatever It Takes Transmission Parts. Inc.

“New Generation” CVT8 Reverse Piston

The differences in the Reverse Piston is easy to identify by looking at the snap ring location. The RE0F10E has an internal snap ring with a more robust piston. It also holds one more steel and friction than the RE0F10D.

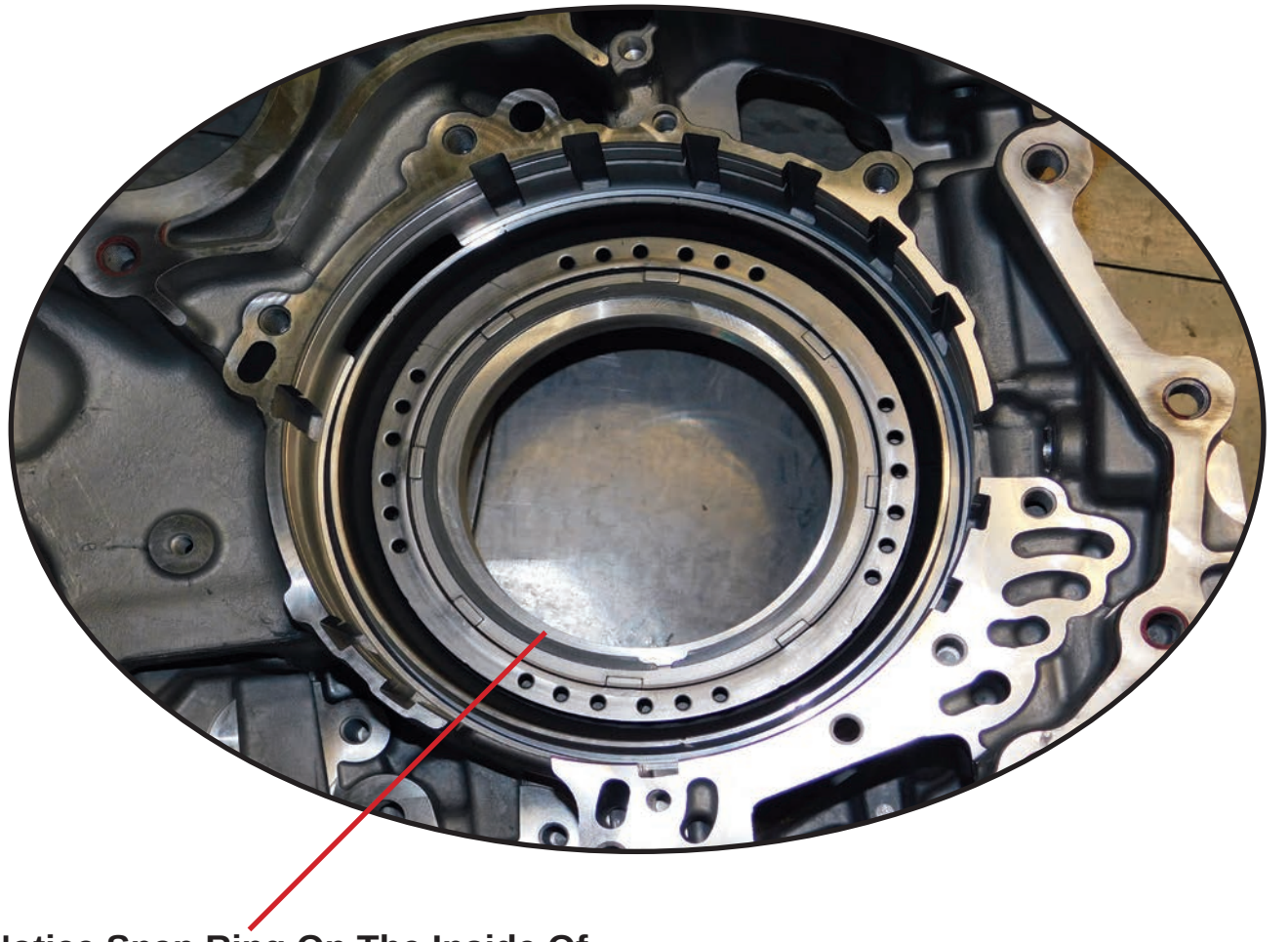

Notice Snap Ring On The Inside Of The Spring Cage

© 2017 Whatever It Takes Transmission Parts. Inc.

1-800-940-0197

RE0F11A Diagnostic Trouble Codes

DTC	Description
P062F	EEPROM
P0705	Transmission Range Sensor A
P0706	Transmission Range Sensor A
P0711	Transmission Fluid Temperature Sensor A
P0712	Transmission Fluid Temperature Sensor A
P0713	Transmission Fluid Temperature Sensor A
P0715	Input Speed Sensor A
P0720	Output Speed Sensor
P0740	Torque Converter
P0743	Torque Converter
P0744	Torque Converter
P0746	Pressure Control Solenoid A
P0846	Transmission Fluid Pressure Sensor/Switch B
P0847	Transmission Fluid Pressure Sensor/Switch B
P0848	Transmission Fluid Pressure Sensor/Switch B
P0863	TCM Communication
P0890	TCM
P0962	Pressure Control Solenoid A
P0963	Pressure Control Solenoid A
P0965	Pressure Control Solenoid B
P0966	Pressure Control Solenoid B
P0967	Pressure Control Solenoid B
P0998	Shift Solenoid F
P0999	Shift Solenoid F
P099B	Shift Solenoid G
P099C	Shift Solenoid G
P1586	G Sensor
P1588	G Sensor
P2765	Input Speed Sensor B
P2857	Clutch A Pressure
P2858	Clutch B Pressure
P2859	Clutch A Pressure
P285A	Clutch B Pressure
U0073	Communication Bus A Off
U0100	Lost Communication (ECM A)
U0140	Lost Communication (BCM)
U0141	Lost Communication (BCM A)
U0155	Lost Communication (IPC)
U0300	CAN Communication Data
U1000	CAN Communication Circuit
U1117	Lost Communication (ABS)

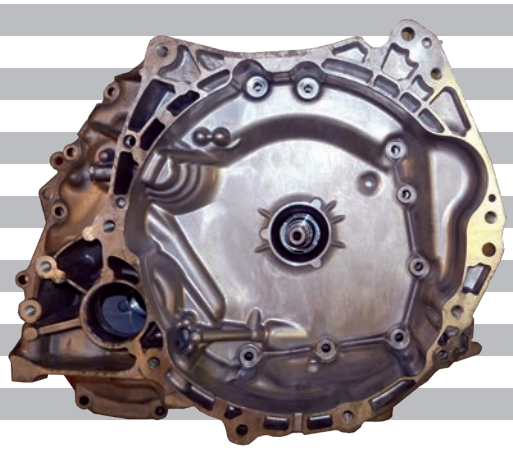

RE0F11A (1.8L)

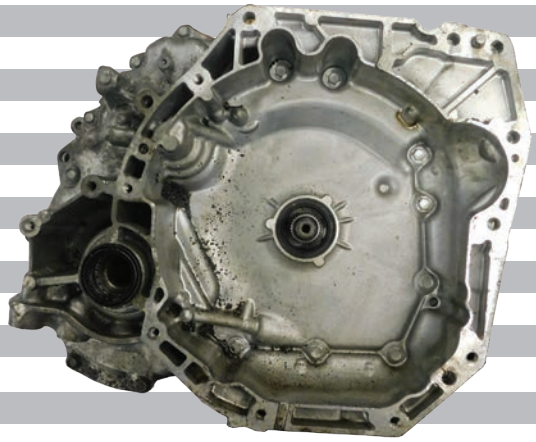

RE0F11A (1.5L)

© 2017 Whatever It Takes Transmission Parts. Inc.

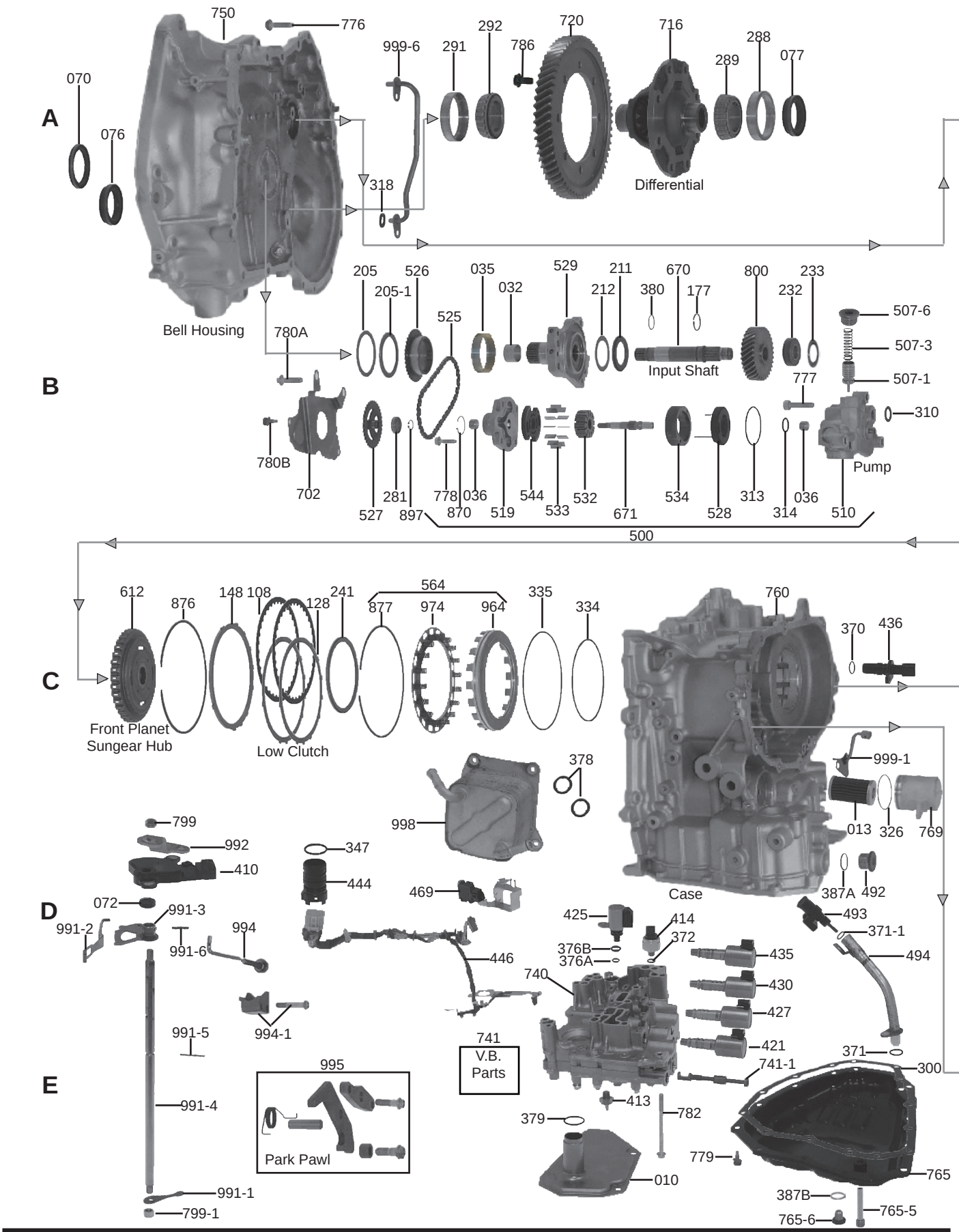

© 2017 Whatever It Takes Transmission Parts. Inc.

RE0F11A (JF015E)

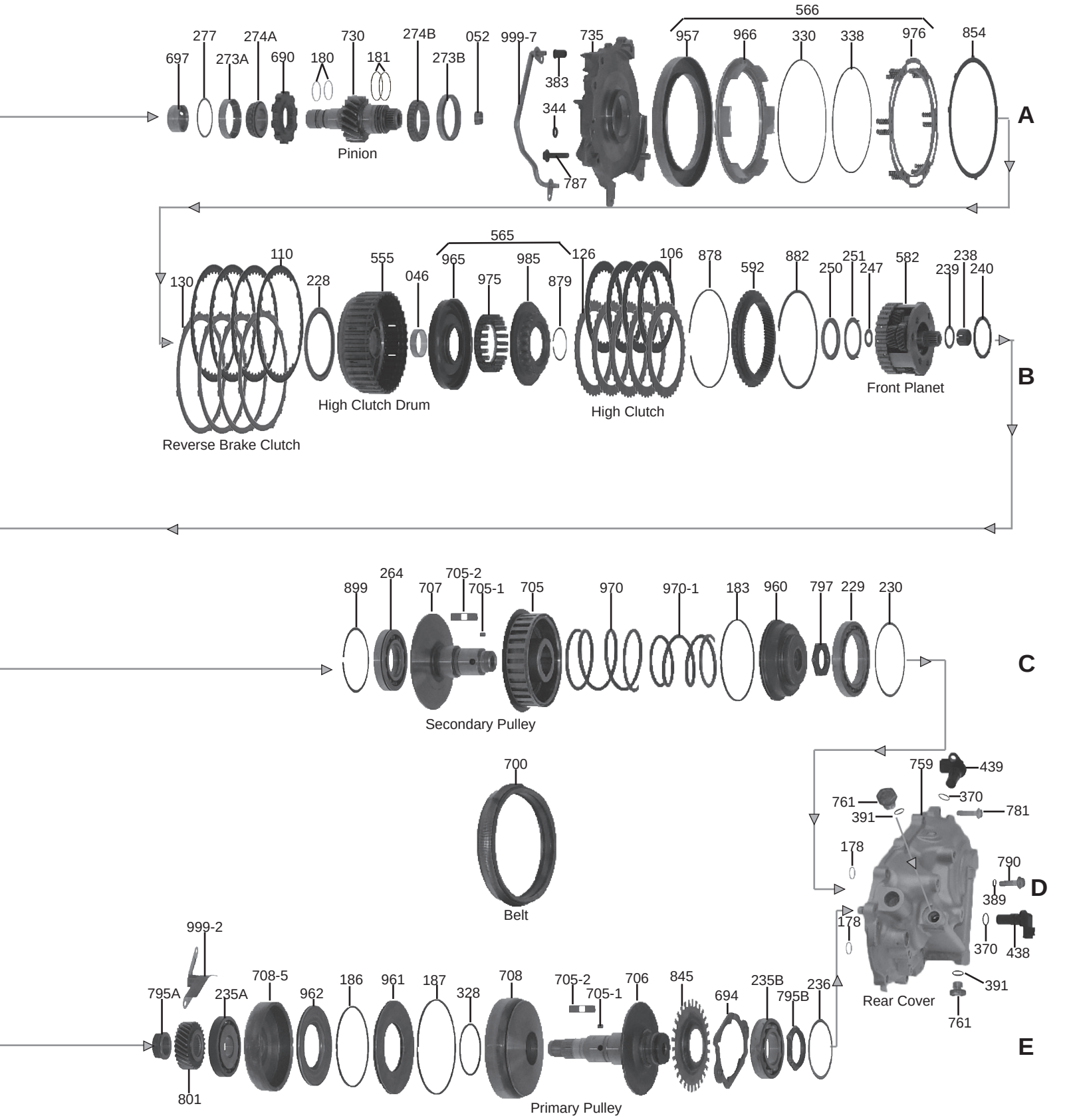

© 2017 Whatever It Takes Transmission Parts. Inc.

Off Axis Chain Driven Vane Style Pump

WIT # 323500A

The Flow Control Valve is very prone to wear.
Sonnax offers a Replacement Valve &
Oversized Valve to correct this issue.
WIT Part # S212507A-1 & S212507AA-1
Must be used with Reamer # T-F-33510B-TL
Also Available **WIT # T212507A-1**
Must Be Used With WIT # T-JF011E-PTK

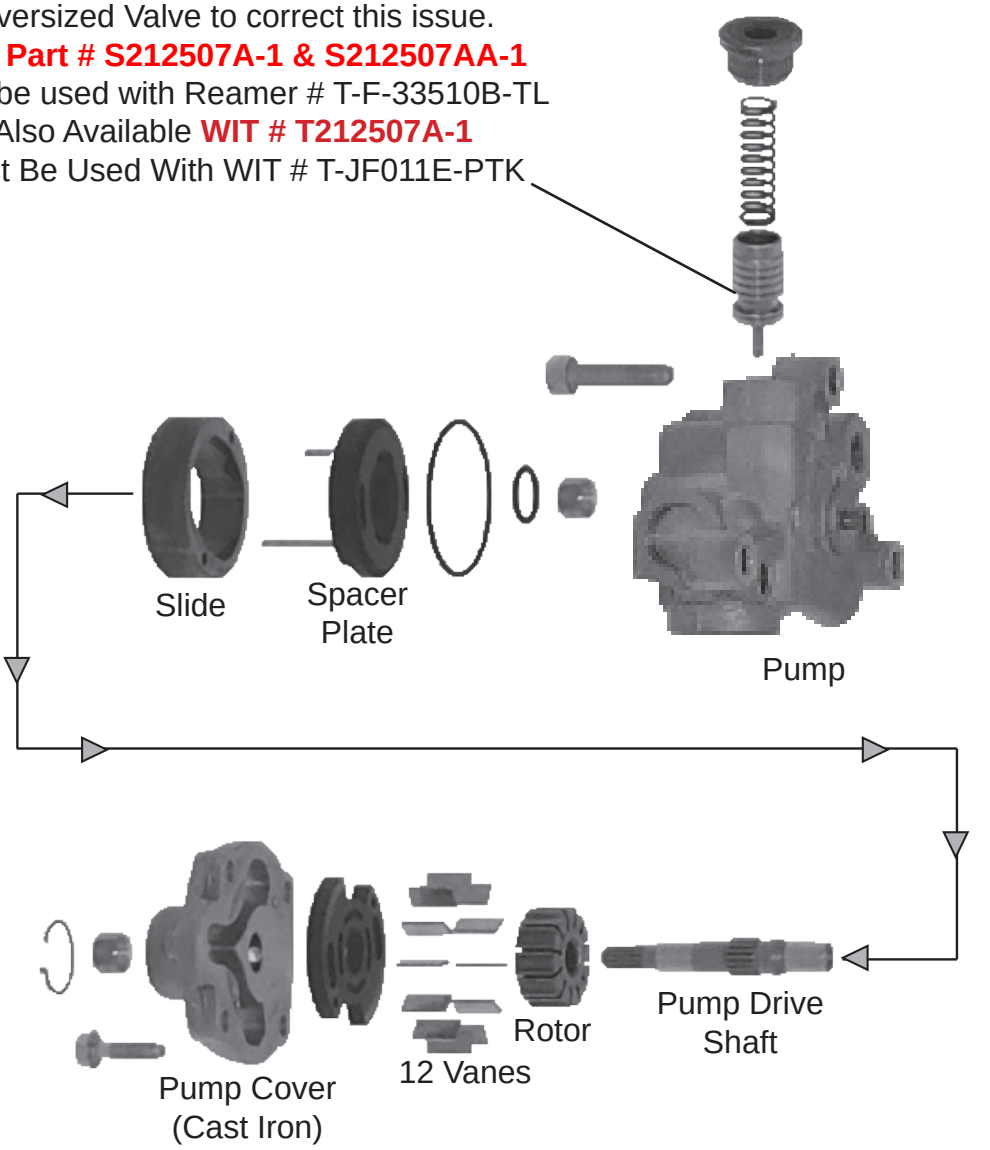

© 2017 Whatever It Takes Transmission Parts. Inc.

1-800-940-0197

Valve Body Solenoid Identification

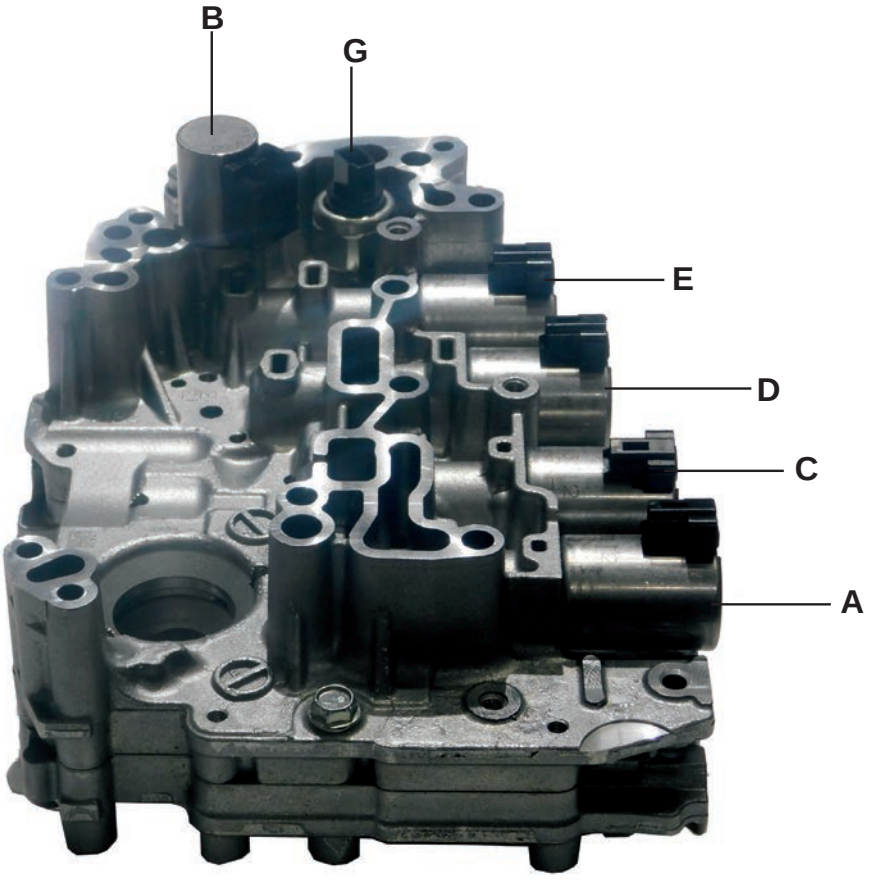

Does Not Use
Ratio Control Motor

Alpha	Description	WIT Part #
	RE0F11A (JF015E) Valve Body (Cast # APX & APZ)(5 Solenoids) (2 Sensors)(2013-16 Versa)(2013-14 Sentra)	323740A
	RE0F11A (JF015E) Valve Body (Cast # 3JX)(5 Solenoids)(2 Sensors) (2012 Versa)	323740B
	RE0F11A (JF015E) Valve Body (5 Solenoids)(2 Sensors) (2015-16 Sentra)	323740C
A	Line Pressure A Solenoid	323421A
B	TCC Control Solenoid	323425A
C	High Clutch & Reverse Brake “G” Solenoid	323427A
D	Low Brake “F” Solenoid	323430A
E	Primary Pressure “B” Solenoid	323435A
F	High Clutch Pressure Sensor	323413A
G	Secondary Pulley Pressure Sensor	323414A
H	High CLutch Pressure Sensor	323413A
I	Rom Assembly	323469A
	Wire Harness	323446A

© 2017 Whatever It Takes Transmission Parts. Inc.

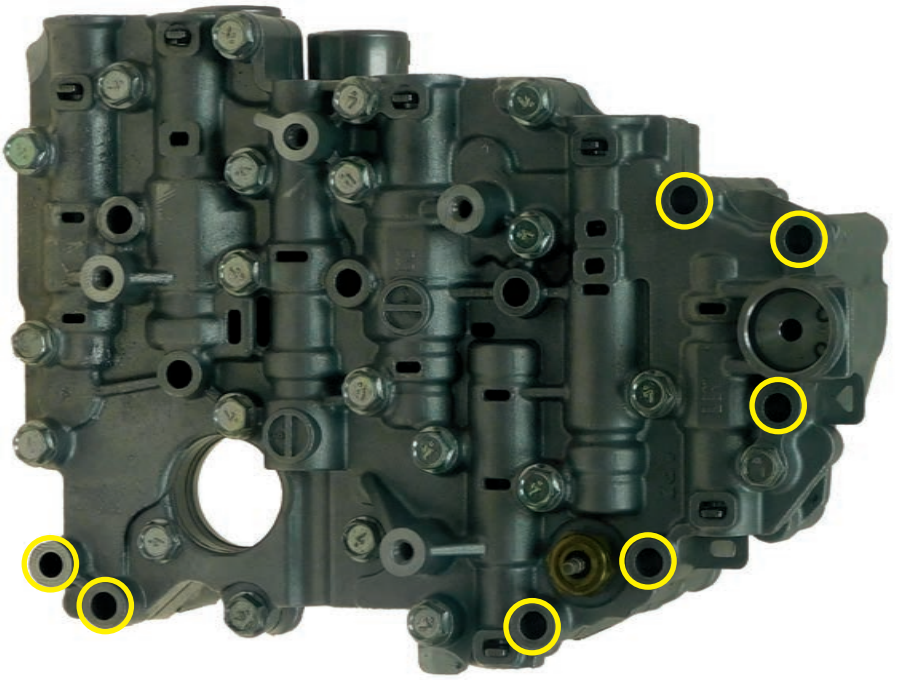

Remove These Bolts to Release Valve Body From The Case

Exploded Valve Body

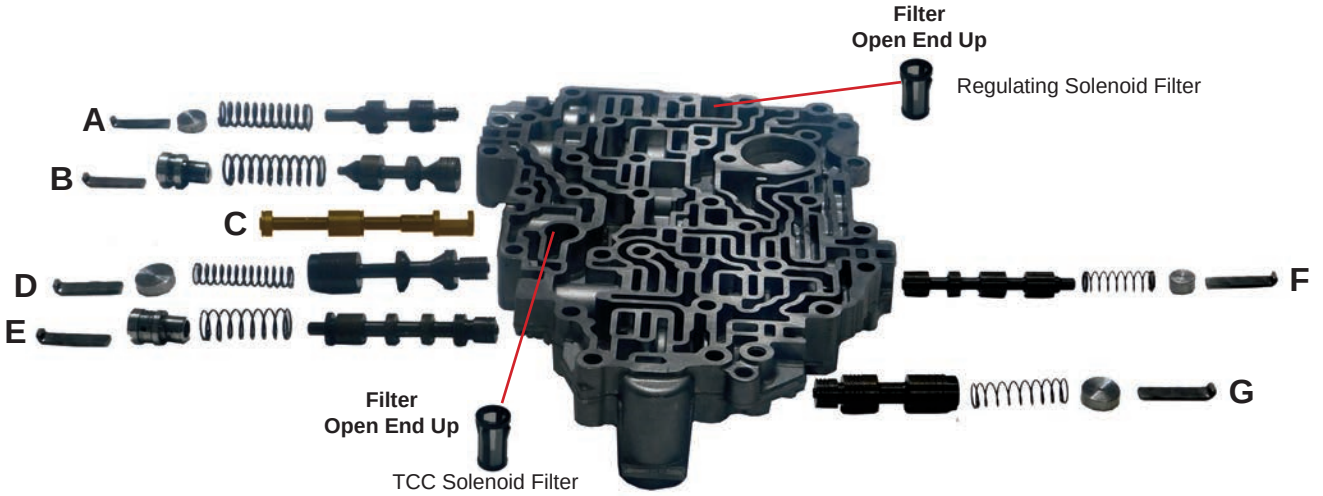

Alpha	Description	WIT Part #
A	Pilot (Solenoid Modulating Valve)	323741CPK
B	TCC Regulating Valve With Boost Valve	323741ACK
C	Manual Valve	323741-1A
D	Pressure Regulator Valve	323741BPK
E	TCC ControlValve With Boost Valve	
F	High Clutch / Reverse Brake Switching Valve	
G	Primary Pressure Control Valve	323741APK

There Is No Low Brake Clutch Valve. The Low Brake Clutch Is Fed Off The Manual Valve.

© 2017 Whatever It Takes Transmission Parts. Inc.

Valve Body Plate

Check Ball and Guide Pin Locations

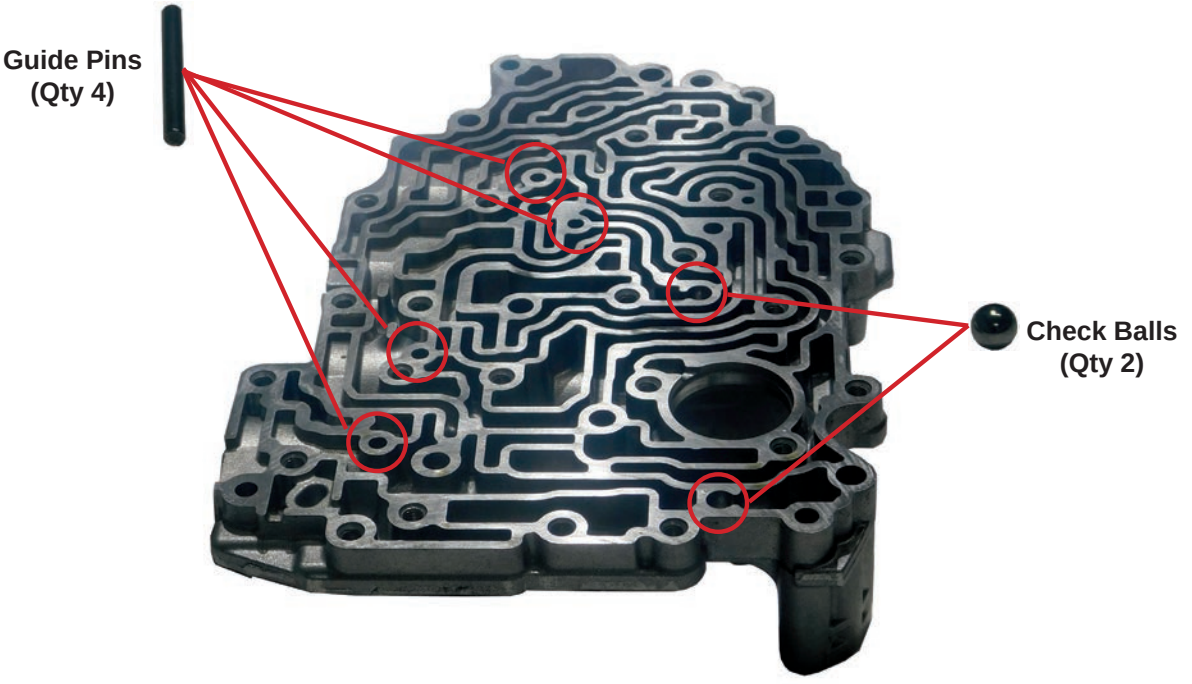

© 2017 Whatever It Takes Transmission Parts. Inc.

Primary Pulley

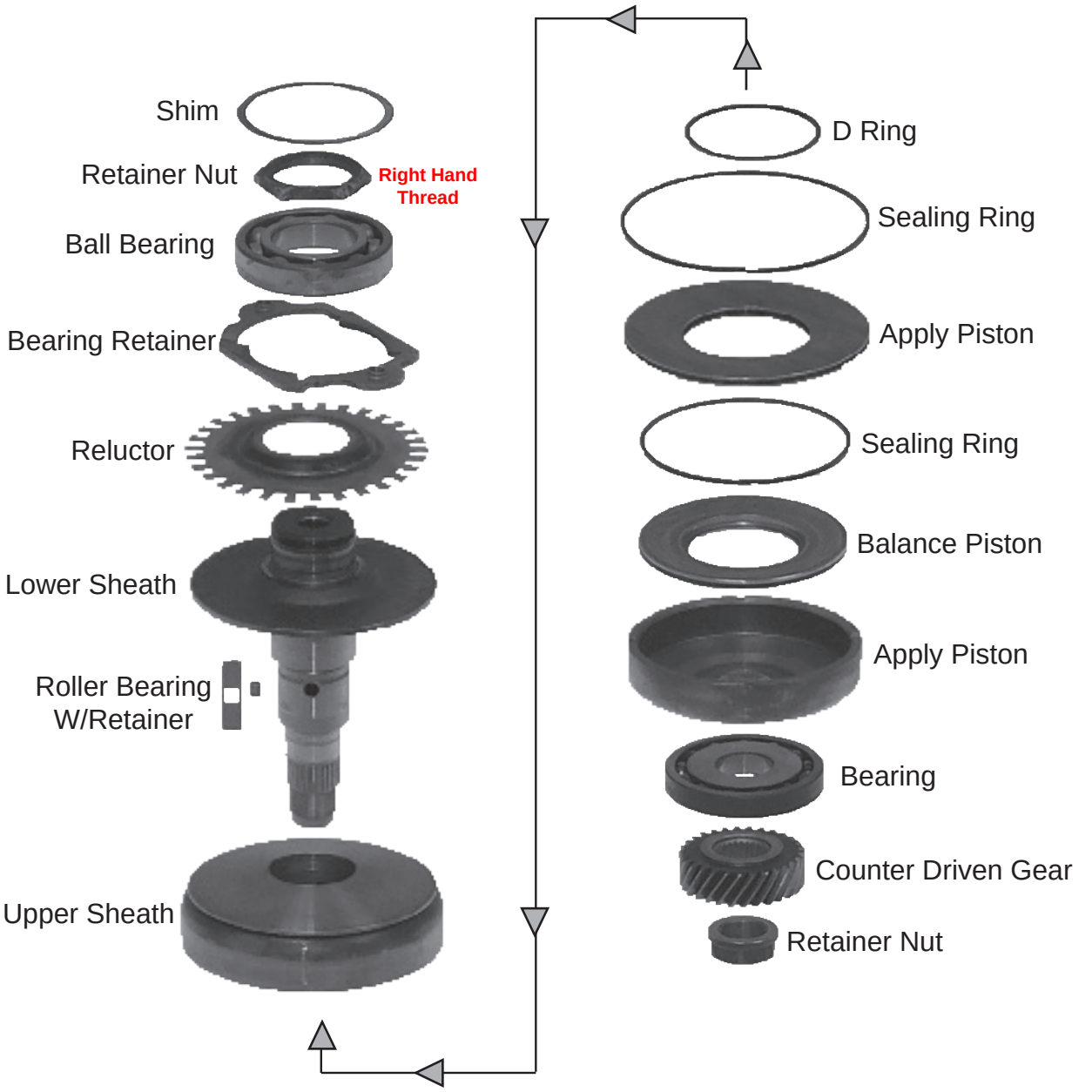

© 2017 Whatever It Takes Transmission Parts. Inc.

1-800-940-0197

Secondary Pulley

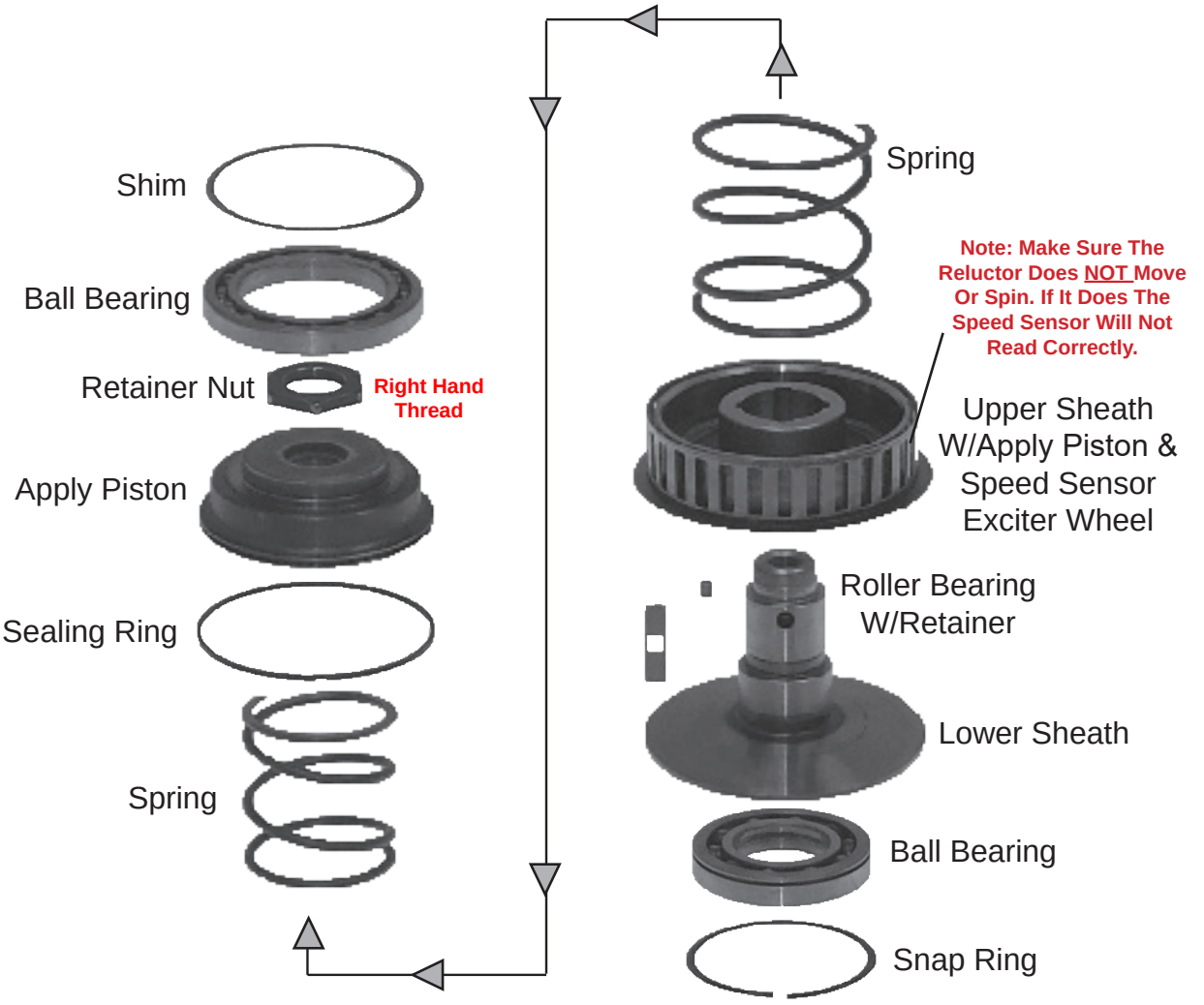

© 2017 Whatever It Takes Transmission Parts. Inc.

RE0F02H Diagnostic Trouble Codes

DTC	Description
P062F	EEPROM
P0701	Transmission Control System
P0705	Transmission Range Sensor A
P0706	Transmission Range Sensor A
P0711	Transmission Fluid Temperature Sensor A
P0712	Transmission Fluid Temperature Sensor A
P0713	Transmission Fluid Temperature Sensor A
P0715	Input Speed Sensor A
P0746	Pressure Control Solenoid A
P0776	Pressure Control Solenoid B
P0778	Pressure Control Solenoid B
P0779	Pressure Control Solenoid B
P0826	Up and Down Shift Switch
P0841	Transmission Fluid Pressure Sensor/Switch A
P0847	Transmission Fluid Pressure Sensor/Switch B
P0848	Transmission Fluid Pressure Sensor/Switch B
P084C	Transmission Fluid Pressure Sensor/Switch H
P084D	Transmission Fluid Pressure Sensor/Switch H
P0863	TCM Communication
P0890	TCM
P0962	Pressure Control Solenoid A
P0963	Pressure Control Solenoid A
P0965	Pressure Control Solenoid B
P0966	Pressure Control Solenoid B
P0967	Pressure Control Solenoid B
P188E	Electric Oil Pump
P1890	Electric Oil Pump Relay
P1891	Electric Oil Pump
P1892	Electric Oil Pump
P2765	Input Speed Sensor B
P2813	Select Solenoid
P2814	Select Solenoid
P2815	Select Solenoid
P281D	Pressure Control Solenoid H
P281E	Pressure Control Solenoid H
P3185	Transmission System
U0073	Communication Bus A Off
U0100	Lost Communication (ECM A)
U0110	Lost Communication (Drive Motor A)
U0155	Lost Communication (IPC)
U0164	Lost Communication (HVAC)
U0293	Lost Communication (HPCM)
U0300	CAN Communication Data
U1000	CAN Communication Circuit
U1117	Lost Communication (ABS)

© 2017 Whatever It Takes Transmission Parts. Inc.

1-800-940-0197

RE0F10J Diagnostic Trouble Codes

DTC	Description
P062F	EEPROM
P0705	Transmission Range Sensor A
P0706	Transmission Range Sensor A
P0711	Transmission Fluid Temperature Sensor A
P0712	Transmission Fluid Temperture Sensor A
P0713	Transmission Fluid Temperature Sensor A
P0715	Input Speed Sensor A
P0717	Input Speed Sensor A
P0740	Torque Converter
P0743	Torque Converter
P0744	Torque Converter
P0746	Pressure Control Solenoid A
P0776	Pressure Control Solenoid B
P0778	Pressure Control Solenoid B
P0779	Pressure Control Solenoid B
P0826	Up & Down Shift Switch
P0841	Transmission Fluid Pressure Sensor/Switch A
P0847	Transmission Fluid Pressure Sensor/Switch B
P0848	Transmission Fluid Pressure Sensor/Switch B
P084C	Transmission Fluid Pressure Sensor/Switch H
P084D	Transmission Fluid Pressure Sensor/Switch H
P0863	TCM Communication
P0890	TCM
P0962	Pressure Control Solenoid A
P0963	Pressure Control Solenoid A
P0965	Pressure Control Solenoid B
P0966	Pressure Control Solenoid B
P0967	Pressure Control Solenoid B
P2765	Input Speed Sensor B
P2813	Select Solenoid
P2814	Select Solenoid
P2815	Select Solenoid
U0073	Communication Bus A Off
U0100	Lost Communication (ECM A)
U0102	Lost Communication (Transfer)
U0121	Lost Communication (ABS)
U0140	Lost Communication (BCM)
U0141	Lost Communication (BCM A)
U0155	Lost Communication (IPC)
U0164	Lost Communication (HVAC)
U0300	CAN Communication Data
U1000	CAN Communication Circuit
U1117	Lost Communication (ABS)
U1118	Lost Communication (AV Control Unit)

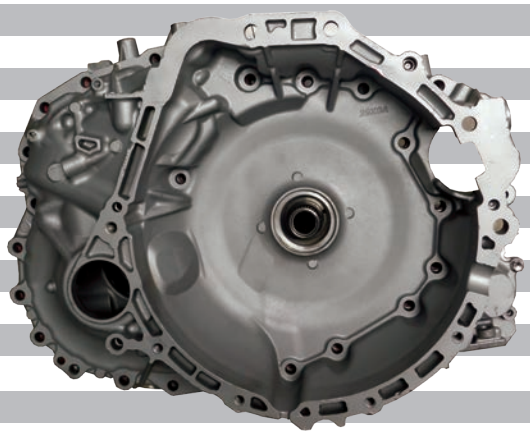

RE0F10E/H/J (3.5L)

© 2017 Whatever It Takes Transmission Parts. Inc.

CVT Tools And Testers

T-0177-A..... 6’ Work Bench W/Rear Drain Trough(12 Gauge)(ATEC)
T-0177-A-08 . 8’ Work Bench W/Rear Drain Trough(12 Gauge)(ATEC)
T-0177-W-6... 6’ Portable Work Bench W/Drian Reservoir Tank(ATEC)
T-RB-100B ... 6’ Work Bench W/Rear Drain Trough (12 Gauge) Made In U.S.A.!!!!
T-RB-100B-10..10’ Work Bench W/Rear Drain Trough (12 Gauge) Made In U.S.A.
T-RB-100B-8..8’ Work Bech W/Rear Drain Trough (12 Gauge) Made In U.S.A.!!!

CVT Press Plate
Press Plate Used In Teardown & Assembly Of CVT Transmission

TJ-2
Posi Lock TJ-2 Transmission Bearing Puller (3 Jaw)
(Better For JF015E RE0F11A Using Smaller Pulleys)
(Jaw Reach is 6”)
(Spread Range Is 1/2” to 7”)

TJ-1
Posi Lock TJ-1 Transmission Bearing Puller, 2 Jaw, 9 1/4” Reach, 2 3/4” to 14 3/4” Spread Range

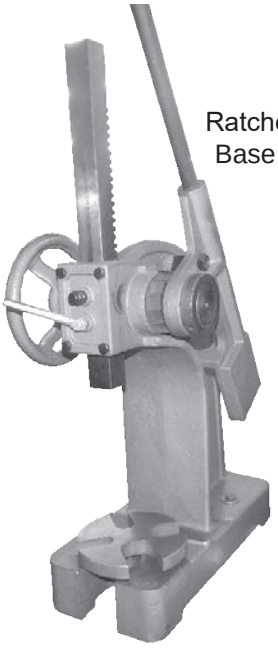

Arbor Press
Ratcheting Arbor Press With 8” x 18” Base 3 ton pressure (These weight 130+ Pounds.

CVT Tools And Testers

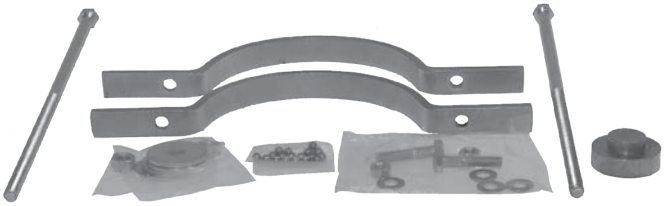

T-JF011E-PTK
Tool Kit, RE0F10A (JF011E) Pulley Tool Kit (Companion Tool Kit For T212507A-1)(Also Includes 18 High Strength 6mm Steel Balls For The Sheave Guide Grooves

T-PHZ-DRV
New Phase Drive Quad Q Drive CVT Stepper Motor Tester (BlueReach)

T-S-MON
Sensor Monitor, Generic And 2 Wire Active Hall Effect Sensor Tester (BlueReach)

T-T0KIJF015E
Tool Kit For RE0F11A / JF015E (CVT-7)

T-EZ-DAQ4
Way E-Zee Data Acquisition Fitting Kit & Interface Box For Vehicle And Dyno (BlueReach)

T-EZ-SFT
Transmission E-Zee Shift, Multi Platform Data Acqusition And Control Interface (BlueReach)

Nissan F08 & F09 Series Secondary Pulley

Using an impact gun and a large socket, remove the nut from the Primary Pulley. The nut has a left hand thread.

Carefully remove the snap ring from the Retainer Shell.

Attach the TJ-1 puller to the assembly as shown and pull the drive gear and park gear off.

Using a hammer and a screwdriver, tap the Retainer Shell until it releases. Remove the shell and set aside.

© 2017 Whatever It Takes Transmission Parts. Inc.

Nissan F08 & F09 Series Secondary Pulley

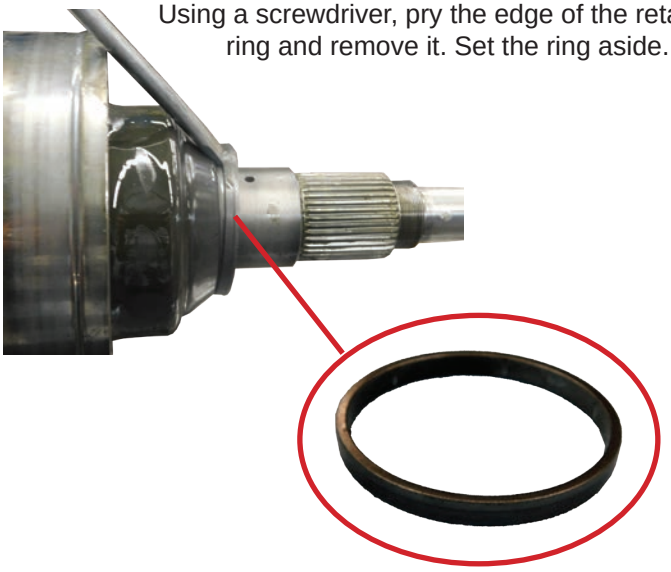

Using a screwdriver, pry the edge of the retaining ring and remove it. Set the ring aside.

Replace the nut on the pulley assembly before continuing to the next step. This has a left hand thread.

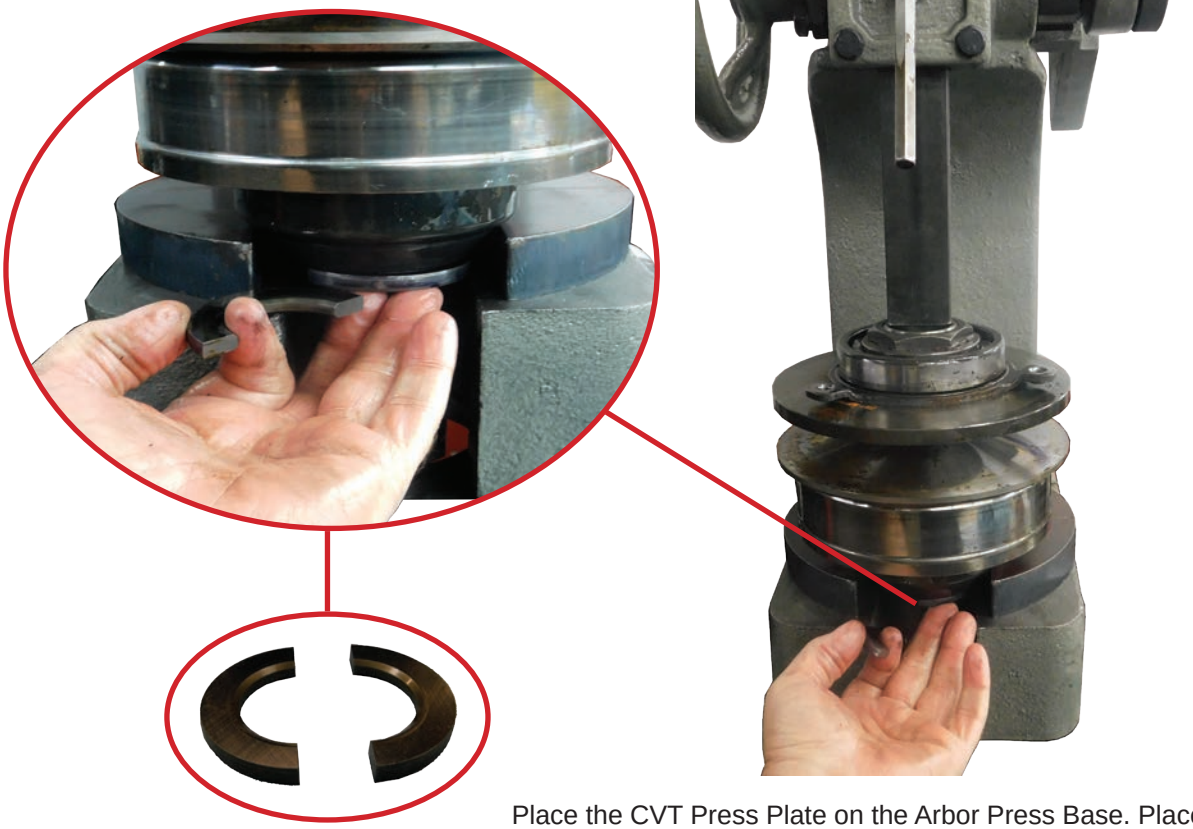

Place the CVT Press Plate on the Arbor Press Base. Place the pulley assembly on the CVT Press Plate with the nut facing down and the bearing on top. Press the shaft down just enough to release the C Clips (Half Moon Retainers) from the Piston Retainer.

© 2017 Whatever It Takes Transmission Parts. Inc.

Nissan F08 & F09 Series Secondary Pulley

Place a bolt with a large head inside the shaft so the threaded rod on the TJ-1 Puller has something to sit on and does not go down inside the shaft.

Remove the Pulley Assembly from the Arbor Press and install the TJ-1 Puller under the Upper Sheath as shown below. Place the entire assembly inside of a 5 gallon bucket or large box during the next step in order to catch the steel balls that will fall out during the disassembly process. Using an impact gun, slowly draw up the upper sheath until it pops off. Remove the TJ-1 while the assembly is still in the bucket. Remove the nut and upper sheath. The steel balls will fall out once the upper sheath is removed. **Take notice of how many steel balls there are. Not all assemblies have the same amount.** Once you have all the steel balls, remove pulley assembly from the bucket.

Do Not Hold TJ-1 In This Area!
When the Upper Sheath pops loose, the spring is released with a lot of pressure and will cause hand injury.

© 2017 Whatever It Takes Transmission Parts. Inc.

Nissan F08 & F09 Series Primary Pulley

Clean all parts of the pulley assembly making sure to remove any metal debris. Remove the Retaining Ring from the inside of the Upper Sheath. Inspect the grooves on the shaft of the Lower Sheath as well as the inside of the Lower Sheath where the steel balls ride for wear. Also inspect the steel balls for wear. Check all surfaces for embedded metal.

Place the Upper Sheath on the Lower Sheath with the stress ball placed between the two pieces as shown.

Using a steel punch, reinstall the steel balls in the grooves located in the Upper Sheath.

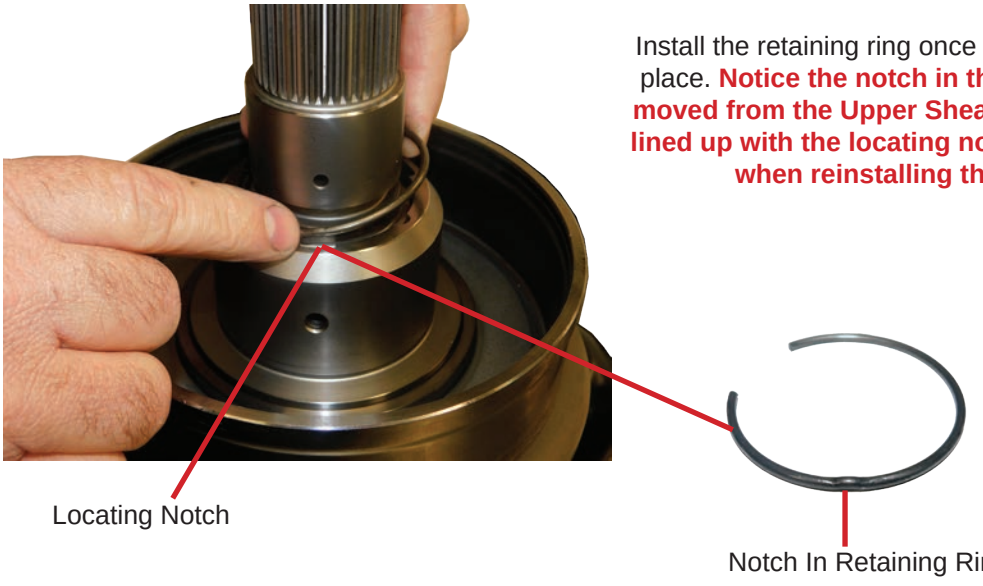

Install the retaining ring once all of the steel balls are in place. **Notice the notch in the retaining ring you removed from the Upper Sheath. This notch has to be lined up with the locating notch in the Upper Sheath when reinstalling the retaining ring.**

© 2017 Whatever It Takes Transmission Parts. Inc.

Nissan F08 & F09 Series Secondary Pulley

Once the retaining ring has been installed, remove the stress ball and make sure that the upper sheath moves up and down on the shaft of the lower sheath freely. Remove the stepped sealing ring from the Apply Piston and inspect for damage. Replace the Sealing Ring with a new one if needed. Place a small dab of assembly gel on the step in sealing ring to help keep it in place. Place the spring, spring seat and the apply piston on the upper sheath. **Make sure that the split in the stepped sealing ring in the piston is facing you so you can make sure that the sealing ring remains in the apply piston and does not get cut when pressing the piston on.** Place the apply piston on and take the entire assembly to the press. Place the CVT Press Plate on the base of the press.

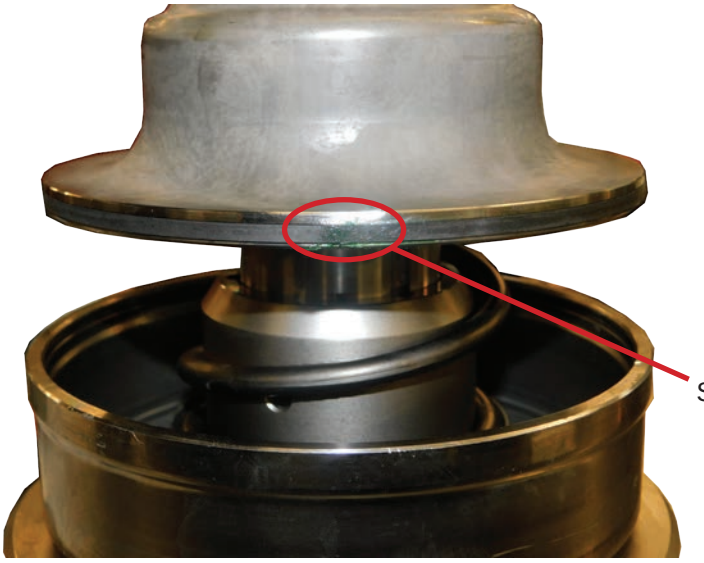

Stepped lap joint in sealing ring in the apply piston.

Carefully turn the assembly over and place it in the CVT Press Plate while holding the assembly together making sure that the steel balls do not fall out. Press the piston retainer into the upper sheath. Keep an eye on the stepped sealing ring, making sure it is locked in place all the way around the piston while pressing it in. If it is not locked in it can get cut while pressing the piston in. Once the piston is pressed in, carefully reinstall the C Clips (Half Moon Retainers), one on each side of the shaft. Slowly release the press and make sure that the C Clips are locked in.

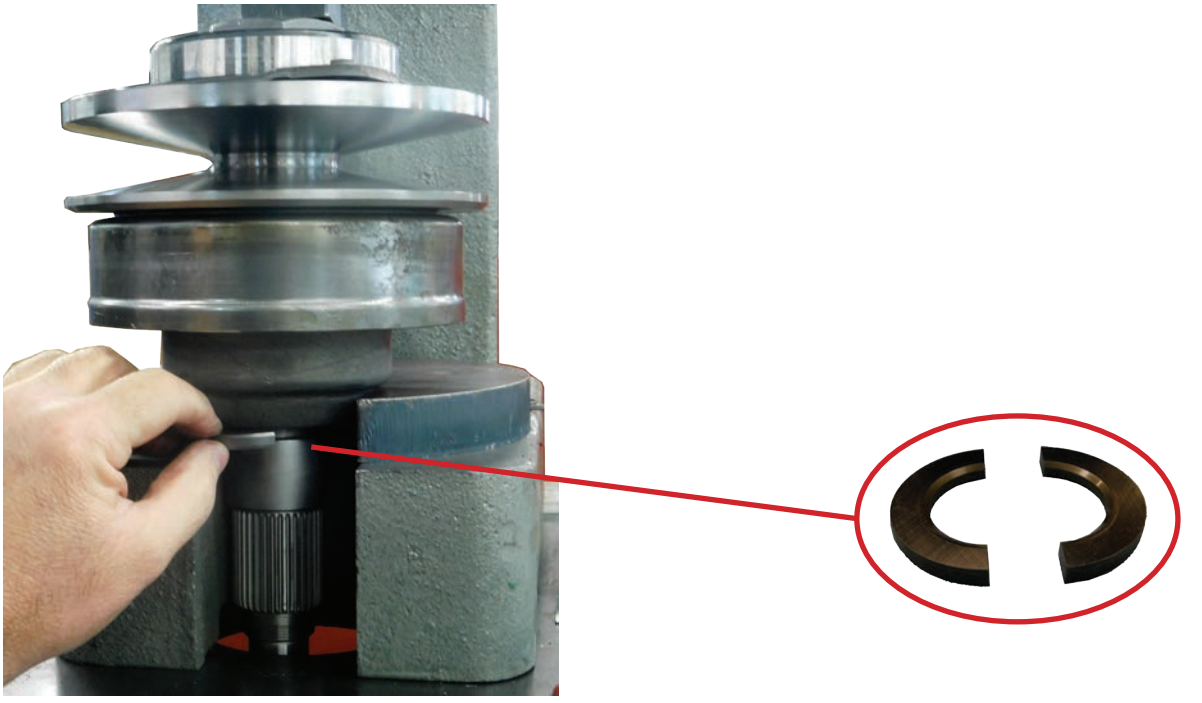

© 2017 Whatever It Takes Transmission Parts. Inc.

Turn the assembly over and install the retainer ring, making sure that it is seated completely.

Place the Retainer Shell on and tap it with a hammer to seat it in the Upper Sheath. Install the snap ring and make sure that the snap ring is completely seated all the way around the Retainer Shell.

Place the Park Gear on the Shaft and take the Pulley Assembly to the Press. Turn the assembly upside down on the CVT Press Plate and press the Park Gear onto the shaft until the Park Gear reaches the bottom of the splines on the shaft.

© 2017 Whatever It Takes Transmission Parts. Inc.

Nissan F08 & F09 Series Secondary Pulley

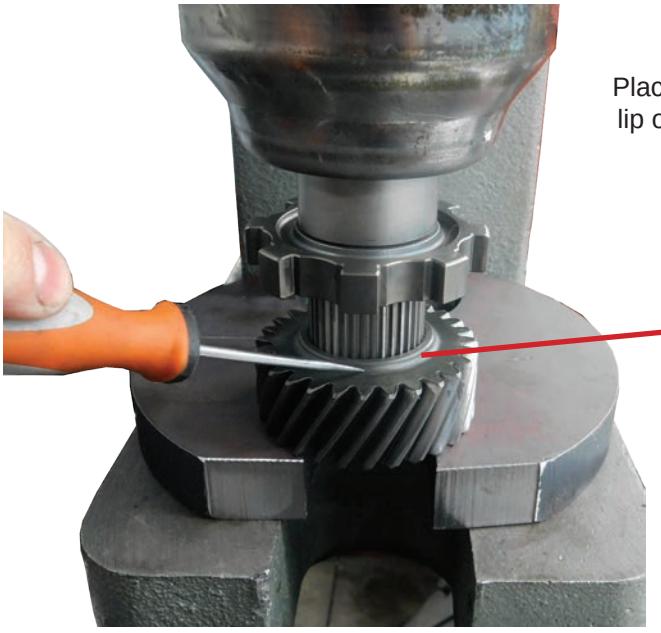

Place the Drive Gear on the shaft, making sure that the lip on the gear is facing the Park Gear. Press the Gear on until it sits on the Park Gear.

Remove the assembly from the press and replace the nut.

© 2017 Whatever It Takes Transmission Parts. Inc.

Nissan F08 & F09 Series Primary Pulley

Using an impact gun and a large socket, remove the nut from the Primary Pulley. The nut has a right hand thread.

Using a 3 Jaw Bearing Puller, attach the puller to the assembly as shown and pull the bearing and pulley retainer off.

Note how the pulley retainer is on the pulley assembly and make sure that you reinstall facing the correct direction.

Reinstall the nut on the pulley assembly before continuing to the next step.

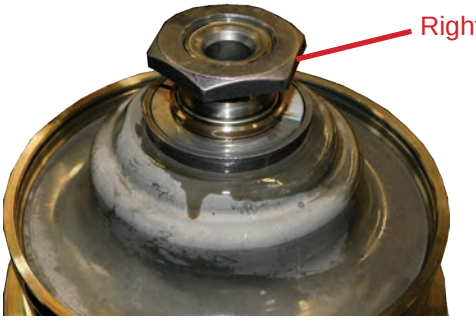

Right Hand Thread

Using a screwdriver, pry the edge of the retaining ring and remove it. Set the ring aside.

© 2017 Whatever It Takes Transmission Parts. Inc.

Nissan F08 & F09 Series Primary Pulley

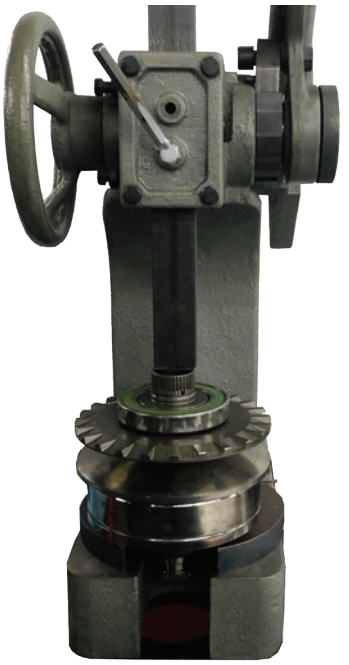

Place the CVT Press Plate on the Arbor Press Base. Place the pulley assembly on the CVT Press Plate with the nut facing down and the bearing on top. Press the shaft down just enough to release the C Clips (Half Moon Retainers) from the Piston Retainer.

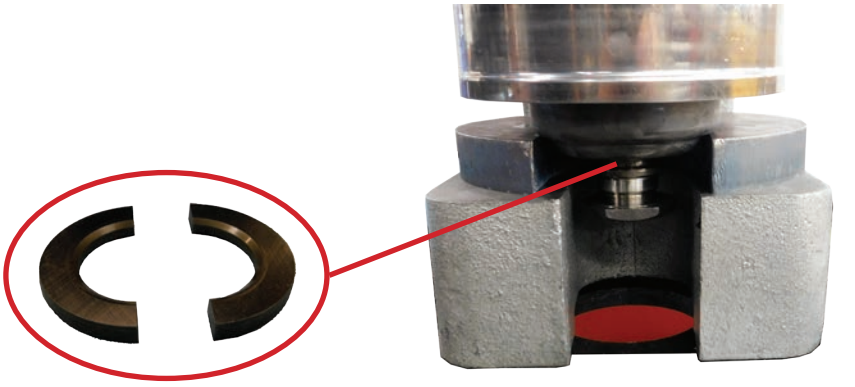

Remove the Pulley Assembly from the Arbor Press and install the TJ-1 Puller under the Upper Sheath as shown below. Place the entire assembly inside of a 5 gallon bucket or large box during the next step in order to catch the steel balls that will fall out during the disassembly process. Using an impact gun, slowly draw up the upper sheath until it pops and hits the nut. Remove the TJ-1 while the assembly is still in the bucket. Remove the nut, piston retainer, spring and upper sheath. The steel balls will fall out once the upper sheath is removed. **Take notice of how many steel balls there are. Not all assemblies have the same amount.** Once you have all the steel balls, remove pulley assembly from the bucket.

Do Not Hold TJ-1 In This Area!
When the Upper Sheath pops loose, the spring is released with a lot of pressure and will cause hand injury.

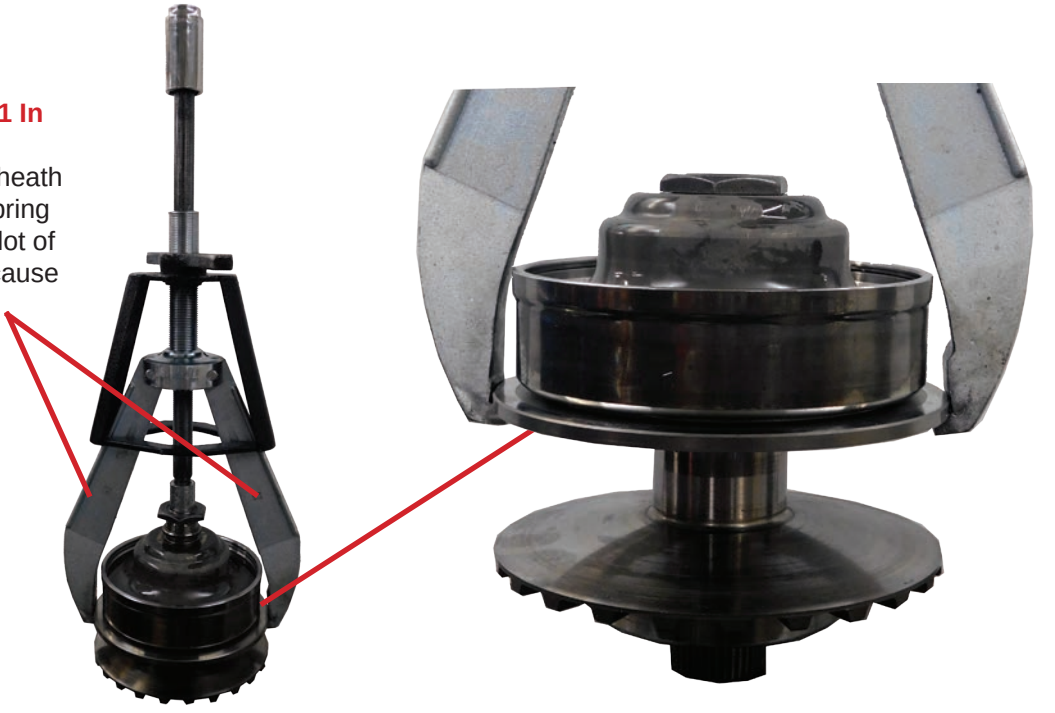

© 2017 Whatever It Takes Transmission Parts. Inc.

Nissan F08 & F09 Series Primary Pulley

Clean all parts of the pulley assembly making sure to remove any metal debris. Remove the Retaining Ring from the inside of the Upper Sheath. Inspect the grooves on the shaft of the Lower Sheath as well as the inside of the Lower Sheath where the steel balls ride for wear. Also inspect the steel balls for wear. Check all surfaces for embedded metal.

Place the Upper Sheath on the Lower Sheath with the stress ball placed between the two pieces as shown.

Using a steel punch, reinstall the steel balls in the grooves located in the Upper Sheath.

Install the retaining ring once all of the steel balls are in place. **Notice the notch in the retaining ring you removed from the Upper Sheath. This notch has to be lined up with the locating notch in the Upper Sheath when reinstalling the retaining ring.**

© 2017 Whatever It Takes Transmission Parts. Inc.

Nissan F08 & F09 Series Primary Pulley

Once the retaining ring has been installed, remove the stress ball and make sure that the upper sheath moves up and down on the shaft of the lower sheath freely. Remove the stepped sealing ring from the Piston Retainer and inspect for damage. Replace the Sealing Ring with a new one if needed. Place a small dab of assembly gel on the step in sealing ring to help keep it in place. Place the spring and the piston retainer on the upper sheath. **Make sure that the split in the stepped sealing ring in the piston is facing you so you can make sure that the sealing ring remains in the piston retainer and does not get cut when pressing the piston on.** Place the piston retainer on and take the entire assembly to the press. Place the CVT Press Plate on the base of the press.

Stepped lap joint in sealing ring in the apply piston.

Carefully turn the assembly over and place it in the CVT Press Plate while holding the assembly together making sure that the steel balls do not fall out. Press the piston retainer into the upper sheath. Keep an eye on the stepped sealing ring, making sure it is locked in place all the way around the piston while pressing it in. If it is not locked in it can get cut while pressing the piston in. Once the piston is pressed in, carefully reinstall the C Clips (Half Moon Retainers), one on each side of the shaft. Slowly release the press and make sure that the C Clips are locked in.

© 2017 Whatever It Takes Transmission Parts. Inc.

Nissan F08 & F09 Series Primary Pulley

Turn the assembly over and install the retainer ring, making sure that it is seated completely.

Place the mounting plate on **making sure to install with the bolt flanges on the correct side**

Place the bearing on making sure that the lip on the inside is facing down next to the mounting plate.

Make sure to inspect the bearings before reinstalling them.Replacement bearings are available.
WIT # S203229AK

© 2017 Whatever It Takes Transmission Parts. Inc.

Nissan F08 & F09 Series Primary Pulley

Take the assembly to the press and place upside down on the CVT Press Plate and press the bearing on.

Remove the assembly from the press and replace the nut.

© 2017 Whatever It Takes Transmission Parts. Inc.

WIT

WIT CARRIES A FULL LINE OF NISSAN CVT TRANSMISSION PARTS

TRAINING SEMINARS, REFERENCE MATERIALS, TOOLS AND PARTS

Our underlying goal has always been to serve the transmission industry. The NIssan CVT transmission makes up nearly 25% of the transmissions in the market today and many shops are reluctant to work on them. WIT is doing our best to change that. We offer training seminars, reference materials, tools, and parts. From the torque converter, overhaul kit, primary and secondary variators, rebuilt pump, valve body, electrical components, and much more!

WWW.WITTRANS.COM

800.940.0197

Nissan F10 Series Secondary Pulley

Before removing the pulley assemblies from the rear cover, place 2 zip ties on opposite sides of the belt. This will keep the belt from falling apart. Note the arrow on the belt and mark on the case the direction of the belt rotation for reference when reinstalling the belt.

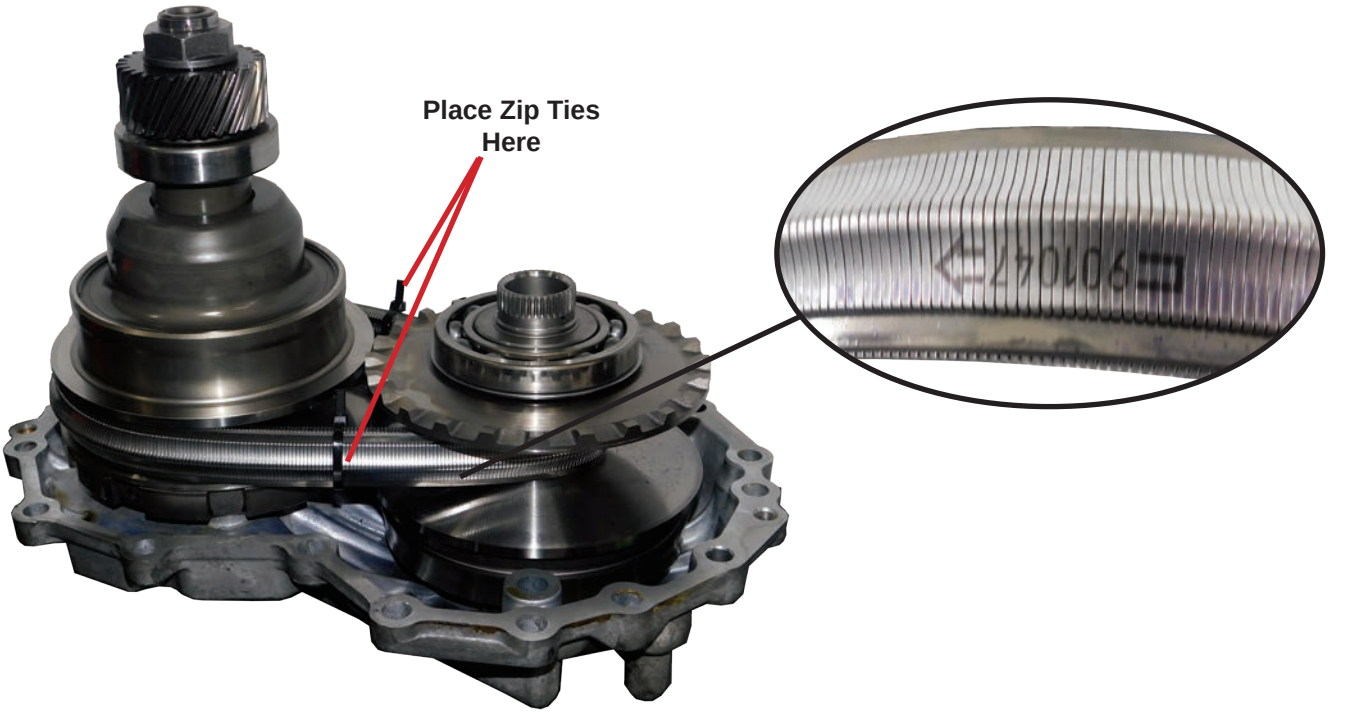

There are 2 ways to remove the belt from the pulley assemblies.

1. While holding the primary pulley assembly push the secondary assembly away and down until the assembly comes away from the belt. If you are having trouble getting the assembly apart have someone place a screwdriver between the belt and under the secondary pulley assembly and pry down while you push the assemblies in opposite directions. This will release the secondary pulley, then you can remove the belt from the primary pulley.
2. Attach the TJ-1 to the secondary pulley assembly and compress the piston to give slack on the belt.

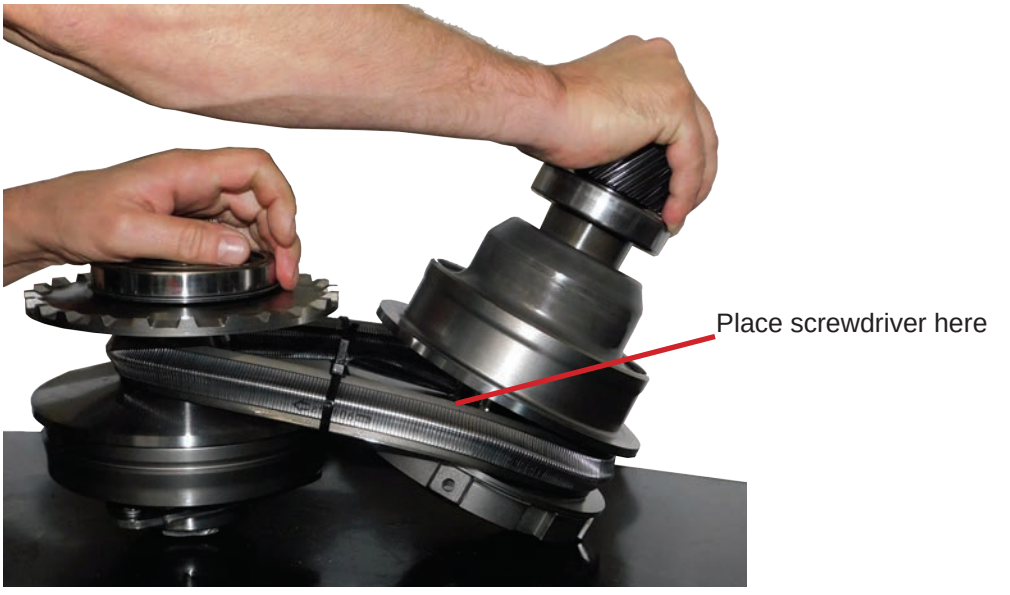

© 2017 Whatever It Takes Transmission Parts. Inc.

Nissan F10 Series Secondary Pulley

Using a socket and an impact gun, remove the nut from the secondary pulley.

Attach the TJ-1 to the Secondary Pulley Assembly as shown.

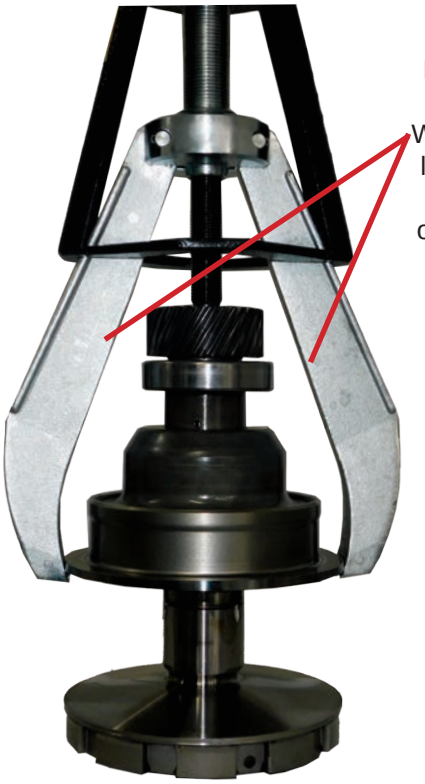

Do Not Hold TJ-1 In This Area!
When the gear pops loose, the spring is released with a lot of pressure and will cause hand injury.

Place the entire assembly inside of a 5 gallon bucket or large box during the next step in order to catch the steel balls that will fall out during the disassembly process. Using an impact gun, slowly draw up the TJ-1 until the gear pops off as shown. **Use caution, this assembly is spring loaded**. Remove the TJ-1 while the assembly is still in the bucket in order to catch the steel balls. **Take notice of how many steel balls there are. Not all assemblies have the same amount.** Once you have all the steel balls, remove pulley assembly from the bucket and take the rest of the assembly apart.

© 2017 Whatever It Takes Transmission Parts. Inc.

Nissan F10 Series Secondary Pulley

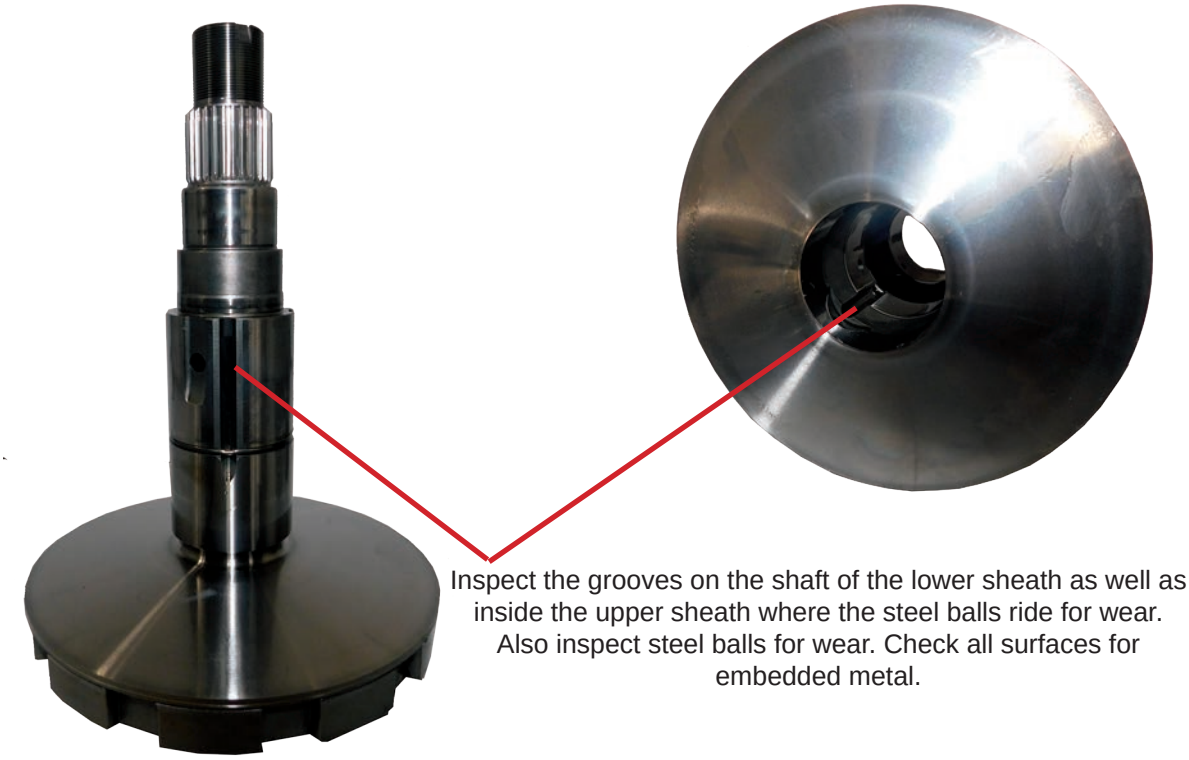

Inspect the grooves on the shaft of the lower sheath as well as inside the upper sheath where the steel balls ride for wear. Also inspect steel balls for wear. Check all surfaces for embedded metal.

Using a large socket, place it on top of the balance piston and compress the piston as shown to remove the snap ring.

© 2017 Whatever It Takes Transmission Parts. Inc.

Nissan F10 Series Secondary Pulley

Clean all parts of the pulley assembly making sure to remove any metal debris. Remove the retaining ring from the inside of the Upper Sheath. Place the Upper Sheath on the Lower Sheath with the stress ball placed between the two pieces as shown.

Notch In Retaining Ring

Using a punch, reinstall the steel balls in the grooves located in the upper sheath. Install the retaining ring once all the steel balls are in place. **Notice the notch in the retaining ring you removed from the upper sheath. This notch has to be lined up with the locating notch in the Upper Sheath when reinstalling the retaining ring.**

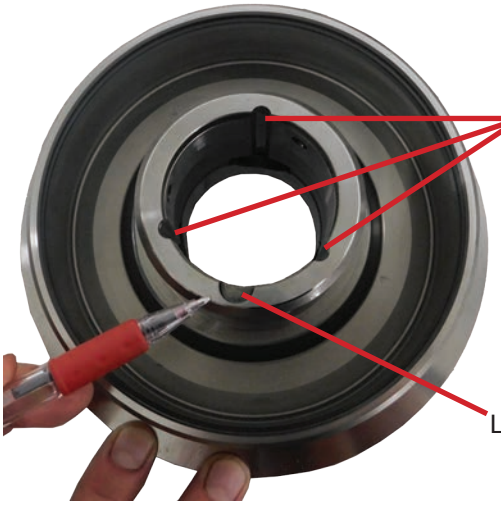

Once the retaining ring has been installed, remove the stress ball and make sure that the upper sheath moves up and down the shaft of the lower sheath freely.

© 2017 Whatever It Takes Transmission Parts. Inc.

Nissan F10 Series Secondary Pulley

Remove the stepped sealing ring from the Apply Piston and inspect for damage. Replace the Sealing Ring with a new one if damage. Place the spring and the apply piston on the upper sheath. **Make sure that the split in the stepped sealing ring on the apply piston is facing you so you can make sure that the sealing ring remains in the apply piston and does not get cut when pressing the piston on.** Place the balance piston on and take the entire assembly to the press. Place the CVT Press Plate on the base of the press.

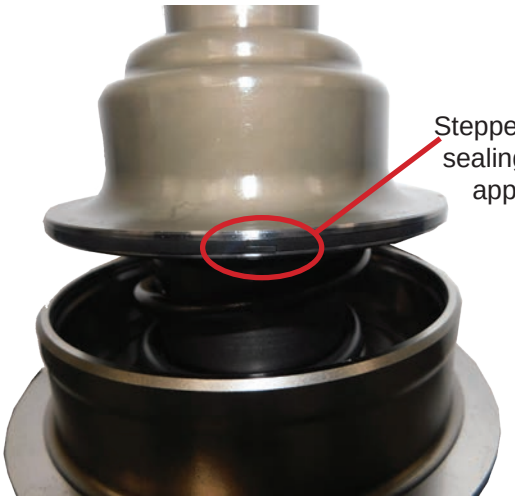

Carefully turn the assembly over and place it in the CVT Press Plate while holding the assembly together making sure that the steel balls do not fall out. Press the apply piston into the upper sheath. Keep an eye on the stepped sealing ring, making sure it is locked in place all the way around the piston while pressing it in. If it is not locked in it can get cut while pressing the piston in.

Press the inner race on with the flanged side against the balance piston. Add the bearing and spacer and press on. Press the gear on last then replace the nut and tighten.

Make sure to inspect the bearings before reinstalling them. Replacement bearings are available.
WIT # S212229AK

© 2017 Whatever It Takes Transmission Parts. Inc.

Nissan F10 Series Secondary Pulley

Attach the TJ-1 as shown. Draw the Upper Sheath up until you have enough clearance to reinstall the snap ring that holds the balance piston in.

Once the snap ring is installed, go around the entire snap ring making sure it is completely embedded in the snap ring groove. The TJ-1 can now be safely removed.

© 2017 Whatever It Takes Transmission Parts. Inc.

Nissan F10 Series Primary Pulley

Using an impact gun and a large socket, remove the nut.

Do Not Hold TJ-1 In This Area!
When the bearing pops loose, if the assembly is spring loaded, the spring is released with a lot of pressure and will cause hand injury.

Attach the TJ-1 to the Primary Pulley Assembly as shown. Place the entire assembly inside of a 5 gallon bucket or large box during the next step in order to catch the steel balls that will fall out during the dis-assembly process. Using an impact gun, slowly draw up the TJ-1 until the bearing pops off . **Use caution, some assemblies are spring loaded and some are not.**. Remove the TJ-1 while the assembly is still in the bucket in order to catch the steel balls. **Take notice of how many steel balls there are. Not all assemblies have the same amount.** Once you have all the steel balls, remove pulley assembly from the bucket.

Remove the Mounting Plate. **Note which side the bolt flanges are on and make sure you reinstall the mounting plate with the flanges facing the correct way.** Remove the Apply Piston and Spring (If Included). **Not All Units Will Have A Spring.**

© 2017 Whatever It Takes Transmission Parts. Inc.

Nissan F10 Series Primary Pulley

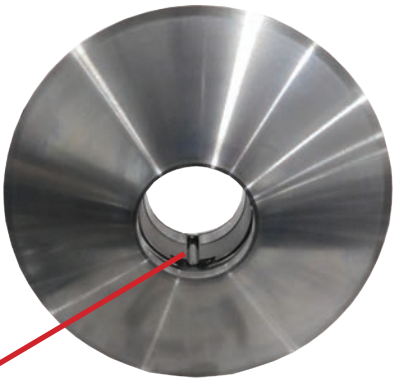

Inspect the grooves on the shaft of the lower sheath as well as inside the upper sheath where the steel balls ride for wear. Also inspect steel balls for wear. Check all surfaces for embedded metal.

Clean all parts of the pulley assembly making sure to remove any metal debris. Remove the retaining ring from the inside of the Upper Sheath. Place the Upper Sheath on the Lower Sheath with the stress ball placed between the two pieces.

Using a punch, install the steel balls in the grooves located in the upper sheath. Install the retaining ring once all the steel balls are in place. **Notice the notch in the retaining ring you removed from the upper sheath. This notch has to be lined up with the locating notch in the Upper Sheath when reinstalling the retaining ring.** Once the retaining ring has been installed, remove the stress ball and make sure that the upper sheath moves up and down on the shaft of the lower sheath freely.

© 2017 Whatever It Takes Transmission Parts. Inc.

Nissan F10 Series Primary Pulley

Remove the stepped sealing ring from the Apply Piston and inspect for damage. Replace the Sealing Ring with a new one if needed. Place the spring (If Included) and the apply piston on the upper sheath. **Make sure that the split in the stepped sealing ring on the apply piston is facing you so you can make sure that the sealing ring remains in the apply piston and does not get cut when pressing the piston on.** Place the balance piston on and take the entire assembly to the press. Place the CVT Press Plate on the base of the press.

Stepped lap joint in sealing ring in the apply piston.

Carefully turn the assembly over and place it in the CVT Press Plate will holding the assembly together making sure that the steel balls do not fall out. Press the apply piston into the upper sheath. Keep an eye on the stepped sealing ring, making sure it is locked in place all the way around the piston while pressing it in. If it is not locked in it can get cut while pressing the piston in.

Place the mounting plate on **making sure to install with the bolt flanges on the correct side** and press the bearing on. Remove the pulley assembly from the press and replace the nut and tighten.

Make sure to inspect the bearings before reinstalling them. Replacement bearings are available.
WIT # S212229AK

Install with the bolt flanges on the correct side.

© 2017 Whatever It Takes Transmission Parts. Inc.

CVT Push Belt Inspection

Inspect the Edges Of The Chain Links For Any Wear Or Scarring.
Turn The Belt Over And Repeat This Process.

With The Belt Laying Flat On A Table, Carefully Remove The Inner Band, Using Care Not To Disturb The Individual Elements So The Belt Does Not Fall Apart. Run Your Fingernail Along Both Outer Edges Of The Band Feeling For Any Knicks, Cracks Or Fraying. If Your Fingernail Catches On Anything, This Is A Sign Of A Fracture In The Band. Repeat This Process For Both Edges On The Inner Side Of The Band. If Nothing Is Found, Re-Install The Band. Turn the Belt Over And Repeat This Process. If Any Knicks Are Found In The Band, The Belt Will Need To Be Replaced. Place Two Zip Ties On Opposite Sides Of The Belt To Hold It Together During Installation On The Pulley Assemblies.

© 2017 Whatever It Takes Transmission Parts. Inc.

Nissan F10 Series Pulley Installation

Using an assembly gel, grease the shim and O-Ring that are in the pocket in the rear cover where the secondary pulley sits. This will keep the shim from falling out during the final assembly.

Place the TJ-1 On The Secondary Pulley Assembly and draw the Upper Sheath up until the Balance Piston touches the bearing. Using a 4L80E Tail Housing Bushing (WIT # 34066D) cut in half, run a zip tie through the hole in the bushing to create a pull handle. Carefully place the bushing half on the shaft of the lower sheath beneath the upper sheath. Carefully release the TJ-1 making sure the bushing half does not fly out. If the Primary Pulley Assembly has a spring, then repeat this process for the Primary Pulley. See Illustration Below for placement of bushing.

4L80E Tail Housing Bushing Cut In Half

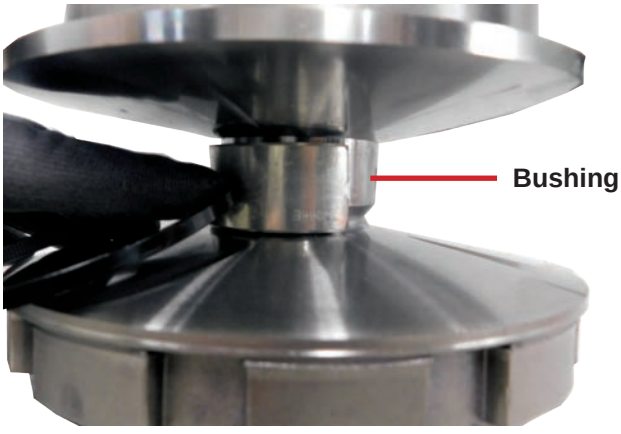

© 2017 Whatever It Takes Transmission Parts. Inc.

Nissan F10 Series Pulley Installation

Lay the belt down on the table, making sure the directional arrow is going in the correct direction. Place the pulley assemblies inside the belt, making sure that the bushing halves are facing each other between the pulley assemblies. **(Do not place the bushing halves where the belt will ride on them or you will not be able to remove them.) (Also Make sure that the zip ties that are on the belt are on opposite sides and in the middle of the pulley assemblies.)**

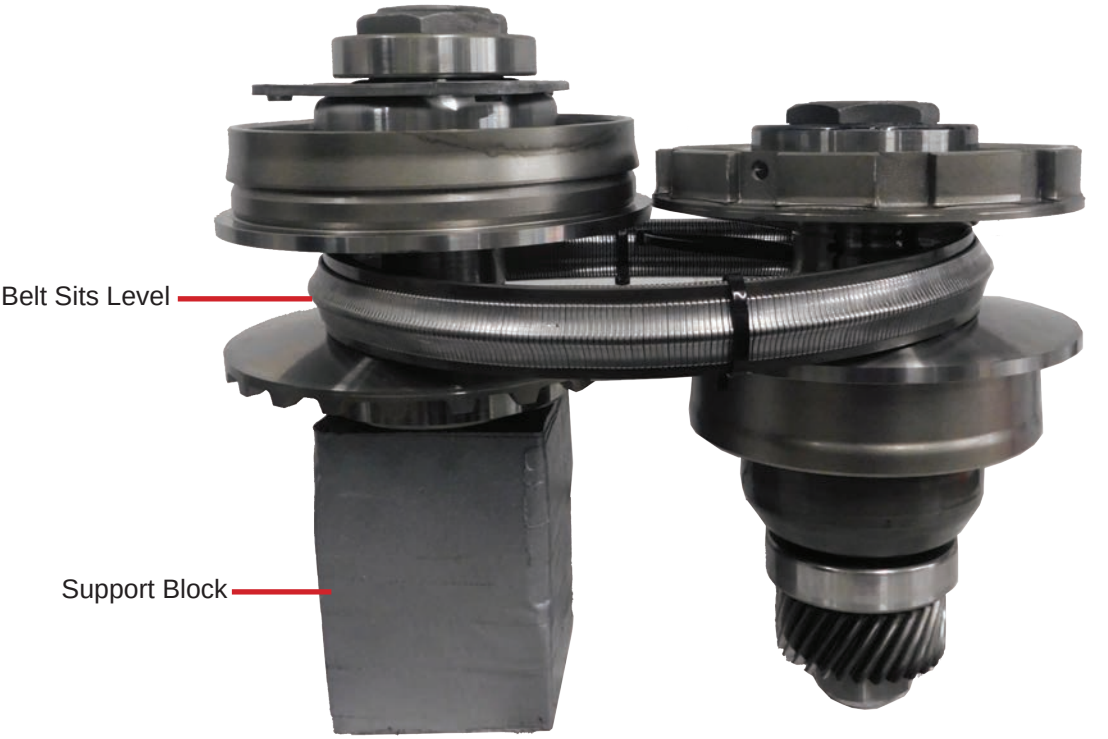

Carefully turn the pulley assemblies over, making sure not to dislodge the bushings holding the upper sheaths open. Place a wooden block or something sturdy, under the primary pulley so the belt is level. (We have used a wooden block with a hole drilled into the center for the shaft of the primary pulley to sit in.)

© 2017 Whatever It Takes Transmission Parts. Inc.

Nissan F10 Series Pulley Installation

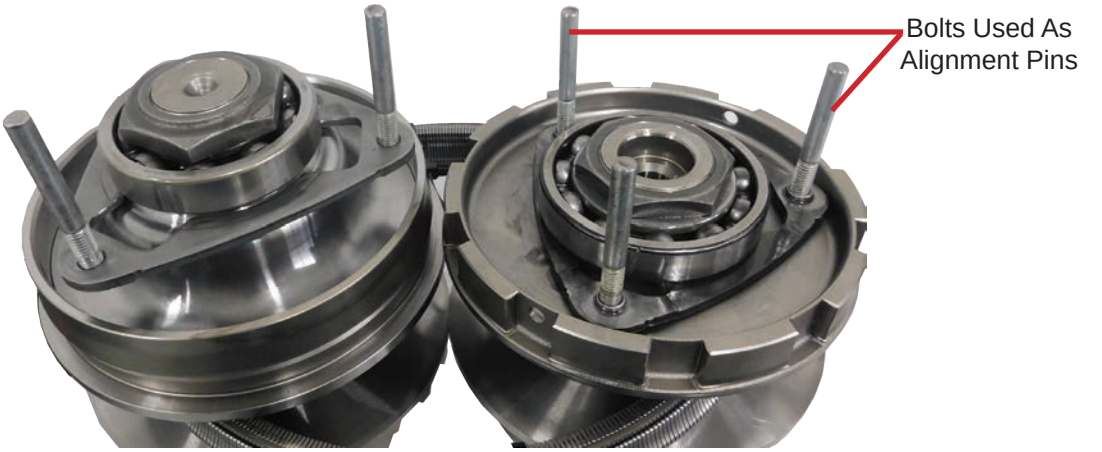

Using 2 1/2” long bolts with the heads cut off as alignment pins, screw the pins into the mounting plates. (4R100 Pump Bolts with the Heads cut off will work)

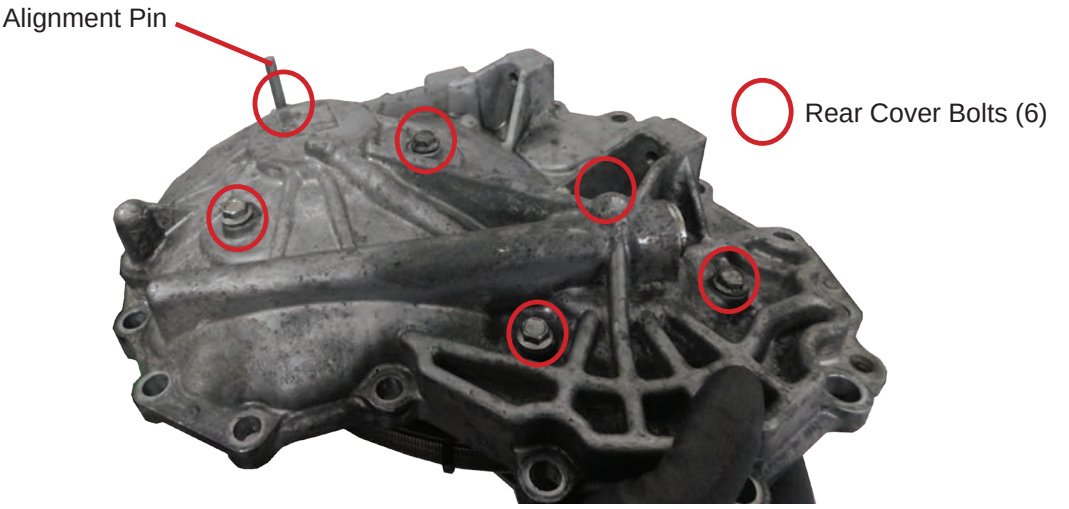

Turn the rear cover over and place on the pully assembly using the alignment pins to find the bolt holes in the rear cover. Using a rubber mallet, carefully tap the rear cover onto the pulley assembly until the bearings on the pulley assemblies are completely seated in the rear cover. Remove one pin at a time and replace with the rear cover bolts. Make sure you use the bolts with the oring. Finger tighten the bolts until all of the pins have been removed and the bolts installed. Once all the bolts are installed tighten the bolts alternatley to insure the rear cover seats properly and is tight with the pulley assemblies.

Turn the assmbly over and carefully remove the bushing shims releasing the upper sheaths. Cut and remove the zip ties on the belt. Rotate each pully assembly to make sure that they spin freely and do not rub against each other.

© 2017 Whatever It Takes Transmission Parts. Inc.

Nissan CVT Push Belts

See Page 101 For Instructions On How To Inspect The Push Belt For Wear.

Van Doorne Push Belt Used In
RE0F08A&B / RE0F09A&B / RE0F10A&B / RE0F11A

RE0F10D "New Generation" Push Belt
The RE0F10D Has A Different Design Push Belt Compared To The A & B Series.

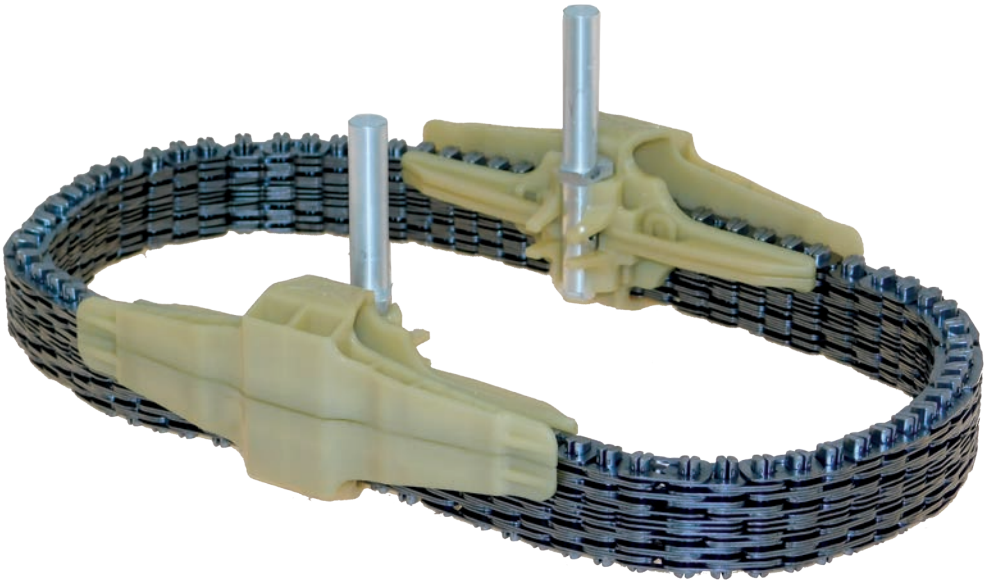

RE0F10E / RE0F10H / RE0F10J
Uses A Chain With Guides

© 2017 Whatever It Takes Transmission Parts. Inc.

Nissan CVT Speed Sensors

The RE0F10A / B Uses 2 Speed Sensors

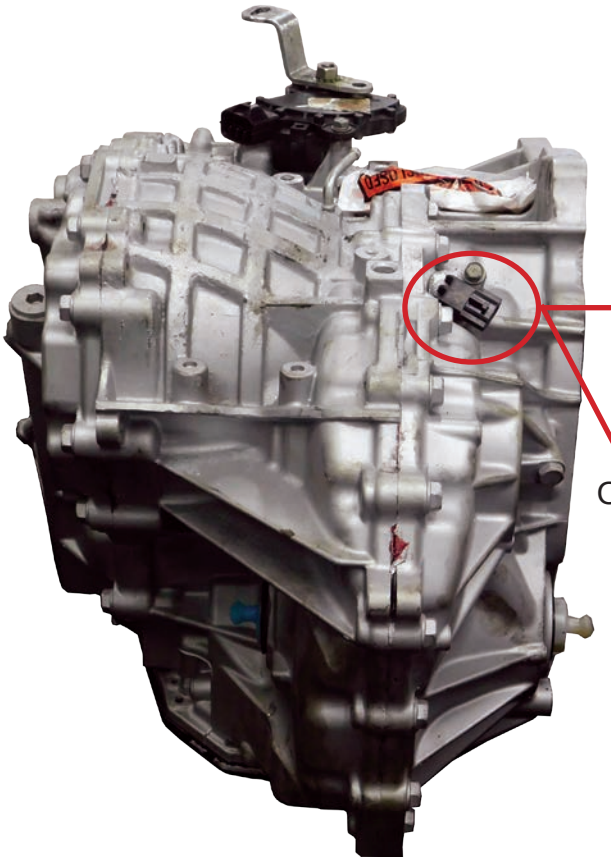

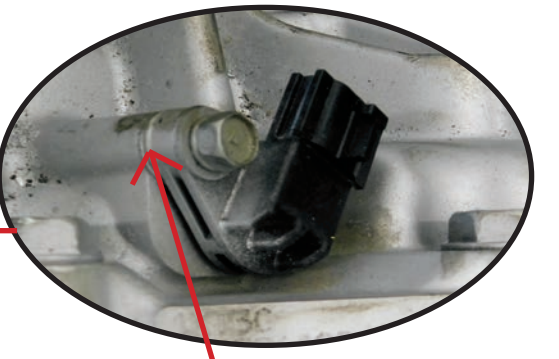

Output Speed Sensor
WIT # 212436A

PAY ATTENTION!
There May Be Spacers Under The Speed Sensor. If It Does Make Sure That They Are Reinstalled. The Drive Gear Tooth Count & OD Will Determine How Many Spacers There Are.
WIT# 203436-1A

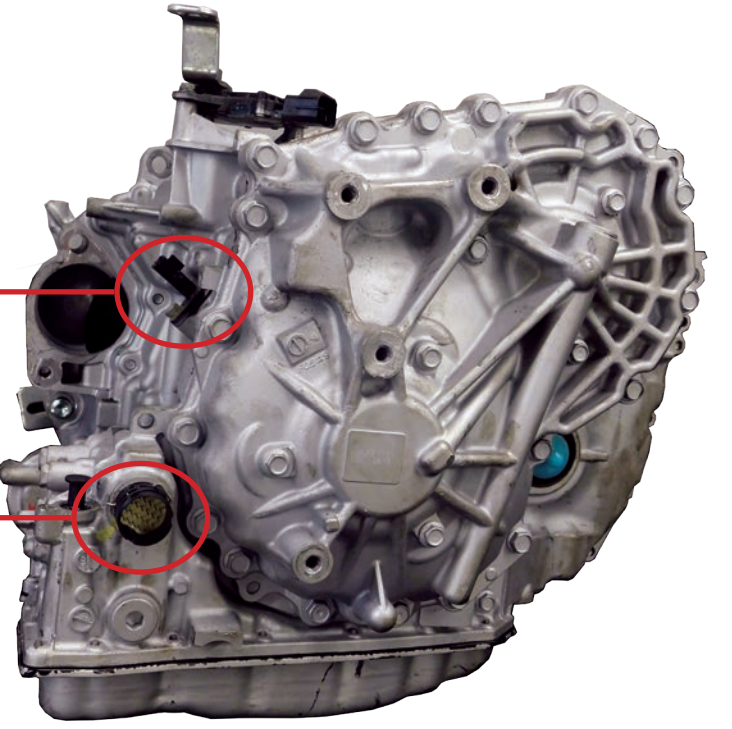

Input Speed Sensor
WIT # 212438A

Main Wire Harness
Connector

© 2017 Whatever It Takes Transmission Parts. Inc.

Nissan CVT Speed Sensors

The RE0F10D / E / H / J Uses 3 Speed Sensors

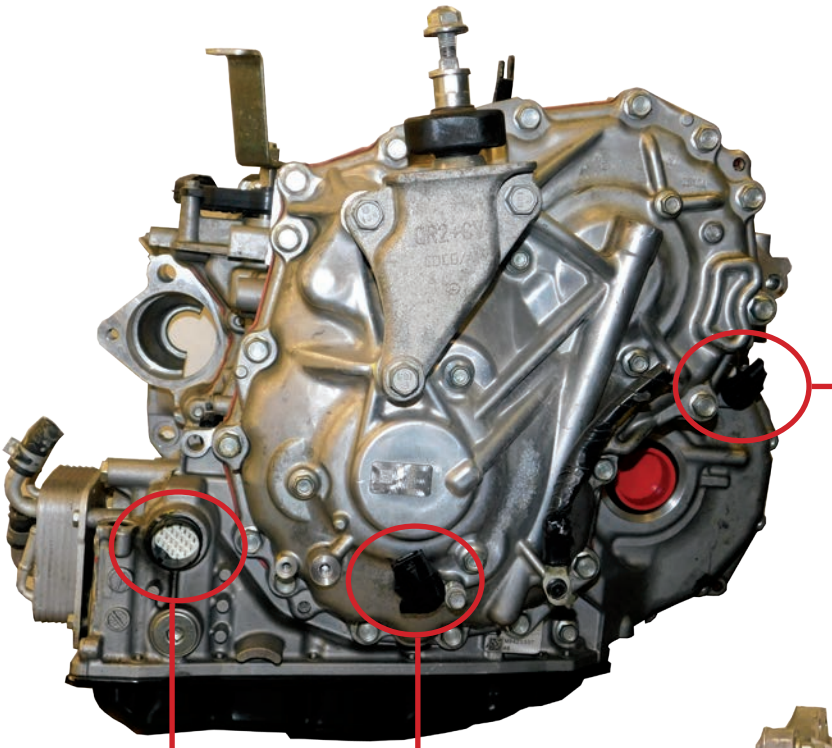

Output Speed Sensor
WIT # 212436A

Main Wire Harness
Connector

Primary Pulley Speed Sensor
WIT # 333439A

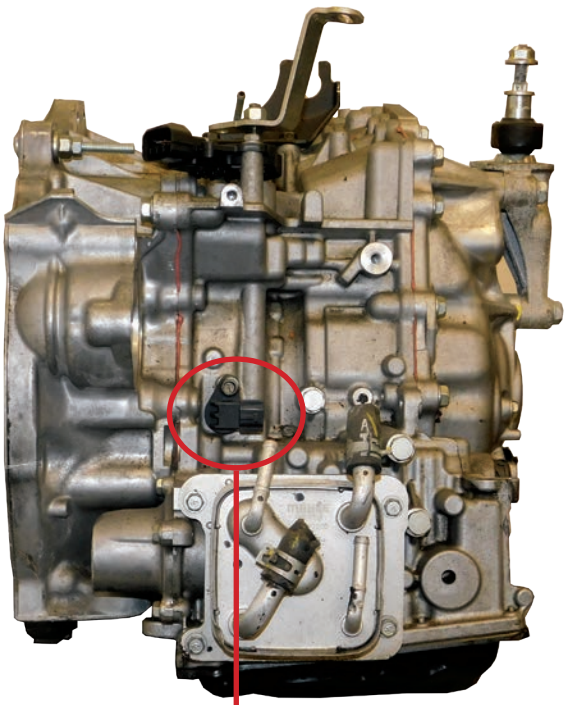

Input Speed Sensor
WIT # 212438A

© 2017 Whatever It Takes Transmission Parts. Inc.

CVT Transmission Fluid Coolers

Nissan Altima And Pathfinder

When a CVT Transmission, Control Valve or Torque Converter replacement is necessary, the CVT transmission fluid coolers (radiator based fluid cooler and external auxiliary cooler if present) **Must Be Flushed.** Metal debris and friction material may become trapped in the radiator, cooling hoses, bypass valve or external CVT fluid cooler. This debris can contaminate the newly replaced transmission, control valve or torque converter. In severe cases this debris can block or restrict flow and may cause damage to the newly serviced CVT transmission.

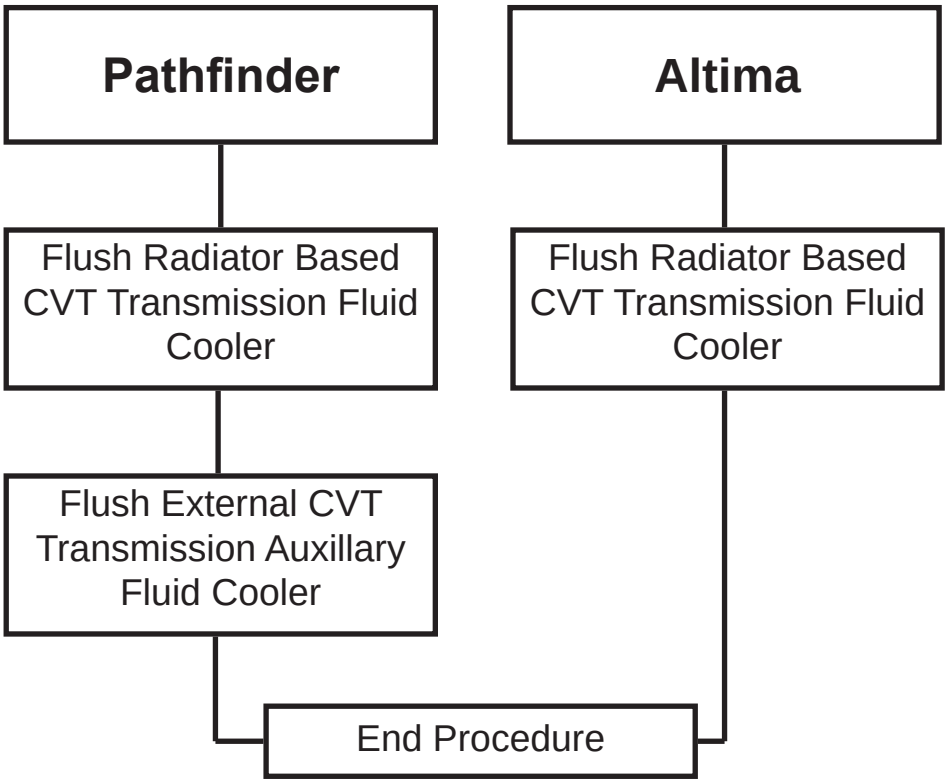

Procedure For Flushing Radiator Based CVT Transmission Fluid Cooler

1. Place the vehicle on a lift.
2. If the vehicle is a Pathfinder, remove the front wheel and then partially remove the front fender protector to gain access to the CVT fluid cooler and then proceed to step 3.

© 2017 Whatever It Takes Transmission Parts. Inc.

1-800-940-0197

3. Place an oil drain pan under the CVT fluid cooler.
4. Unbolt and disconnect the external CVT fluid cooler bypass valve from the external CVT fluid cooler as shown. (Figure 1)
5. Place and oil drain pan under the CVT warmer.

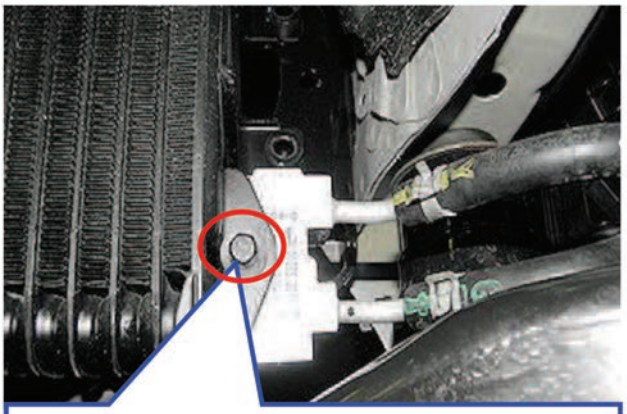

Two (10 mm head) bolts attach bypass valve to the fluid cooler. The other bolt is on the opposite side of bypass valve.

Figure 1

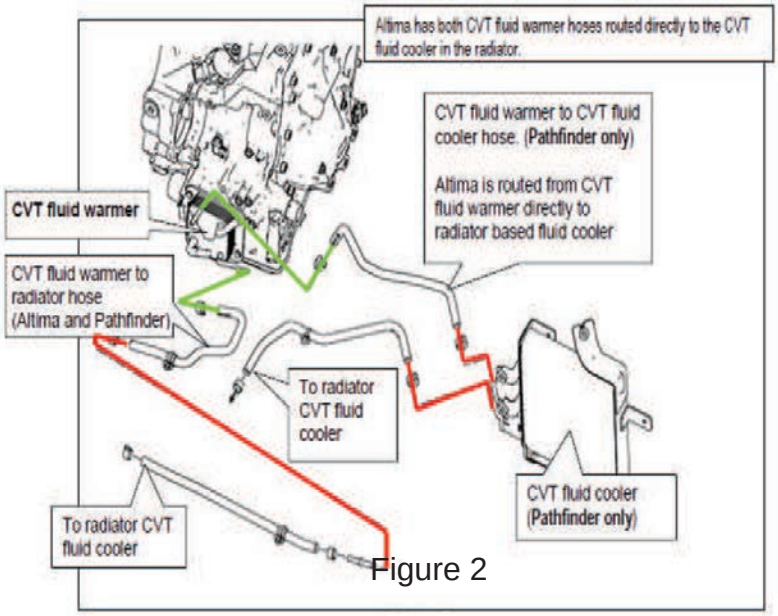

Figure 2

6. For both Pathfinder and Altima, disconnect the CVT fluid cooler inlet and outlet rubber hoses from the CVT fluid warmer and discard spring clamps. (Figure 2)

Note: If rubber material from a cooler hose remains on the steel tube or fitting, replace the rubber hose and clean the steel tube.

7. Allow any transmission fluid that remains in the CVT fluid cooler hoses to drain into the oil drain pan.

Note: The two hoses that have been removed from the CVT fluid warmer will be flushed in one direction and then in the other.

Caution:

Wear safety glasses and rubber gloves when using the Transmission Cooler Cleaner. Spray CVT Cooler Cleaner only in areas with adequate ventilation. Avoid contact with eyes and skin. Do not breathe in vapors or mist from spray.

© 2017 Whatever It Takes Transmission Parts. Inc.

8. Insert the “Extension Adapter Hose” from a can of Transmission Cooler Cleaner into one or the other of the disconnected CVT fluid cooler hoses. (Figure 3)
9. Flush CVT fluid cooler (Radiator Based) and hoses.
10. Hold the hose and can as high as possible. For the Pathfinder, block the CVT fluid cooler bypass valve fluid passage with your thumb. (Figure 3)
11. Spray Transmission Cooler Cleaner, in a continuous stream, into the CVT fluid cooler inlet hose.
12. Spray fluid until it flows out of the other hose for approximately 5 seconds.

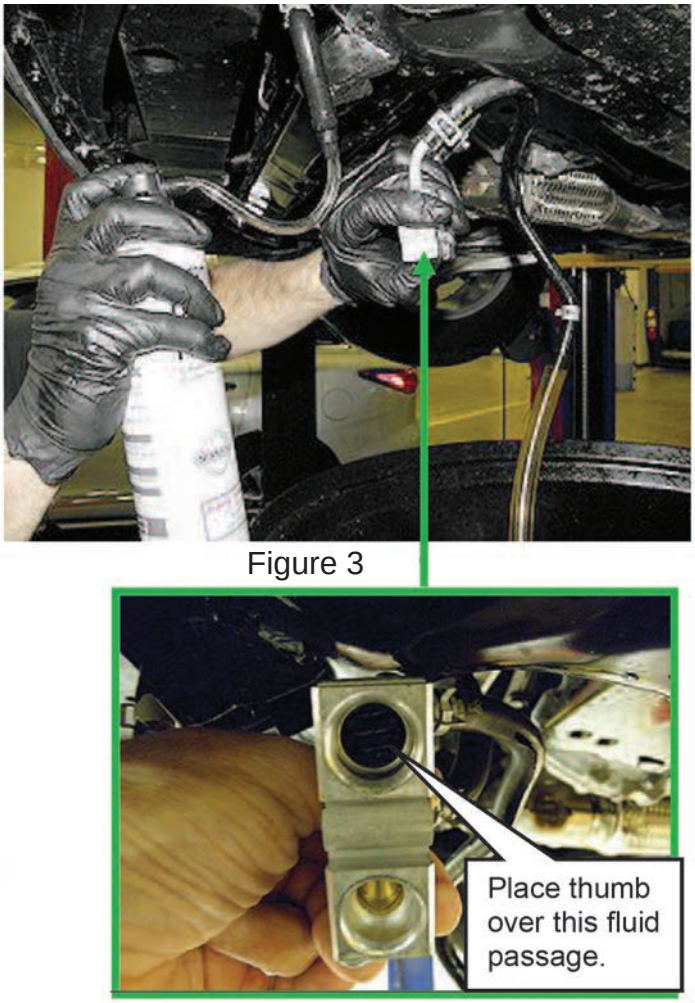

Figure 3

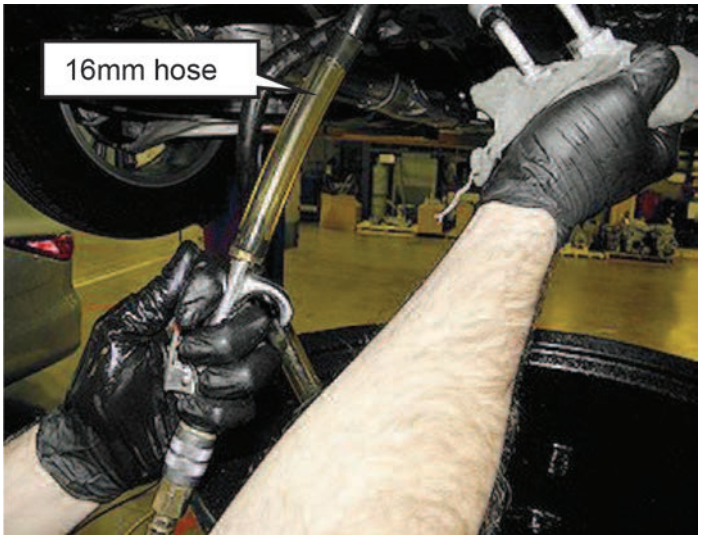

Figure 4

13. Slide a piece of 16mm hose over the end of the CVT fluid cooler hose that was used as the flush inlet. (Figure 4)
14. Insert the tip of an air gun into the end of the 16mm hose.(Figure 4) For the Pathfinder, block the fluid cooler bypass valve fluid passage with thumb. (Figure 3)
15. Blow compressed air, regulated to 70-130PSI, through the CVT fluid cooler hose for 10 seconds to force out any remaining fluid.
16. Repeat steps 8-15 one additional time.
17. **Reverse the direction that the hoses are being flushed (Figure 3) and repeat steps 8-15 twice.**
18. Reassemble the CVT fluid cooler hoses to the CVT warmer with new spring clamps in the reverse order of disassembly.
19. If the vehicle is a Pathfinder, proceed to Flushing External Auxiliary Oil Cooler.

© 2017 Whatever It Takes Transmission Parts. Inc.

1-800-940-0197

Flushing External CVT Transmission Auxillary Fluid Cooler

Pathfinder Only

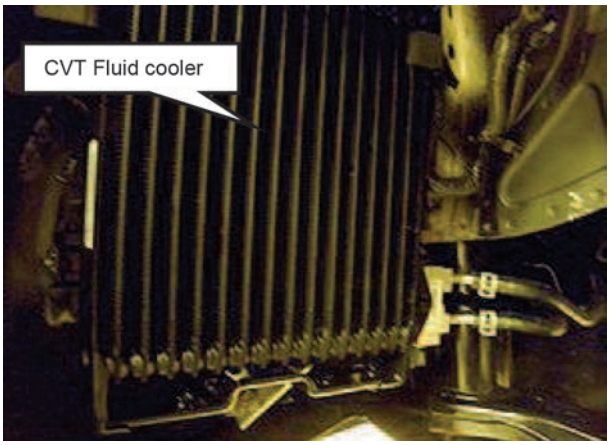

Figure 5

1. Remove the CVT fluid cooler (auxiliary fluid cooler) from vehicle.
2. Remove O-Rings from auxiliary fluid cooler and discard.

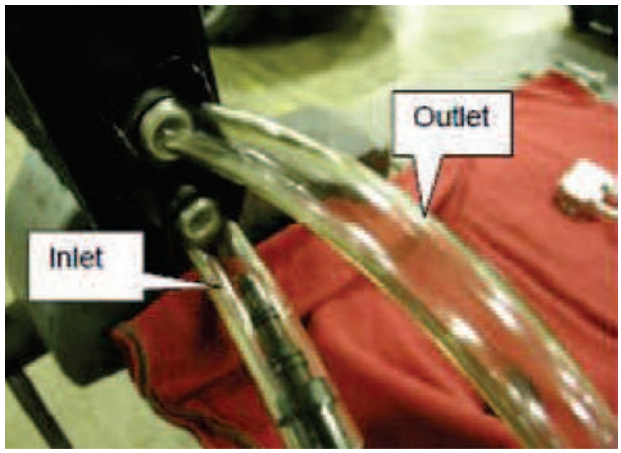

Figure 6

3. Install a120mm long hose with an inside diameter of 16mm onto the inlet side of the auxiliary fluid cooler.
4. Install a 150mm long hose with inside diameter of 16mm onto the outlet of the auxiliary fluid cooler and place the opposite end into a suitable container to catch used fluid.

Figure 7

5. Insert the extension adapter hose from a can of Transmission Cooler Cleaner into the auxiliary cooler inlet. (Figure 7)
6. Spray one full can of Transmission Cooler Cleaner through the inlet of the auxiliary fluid cooler letting the cleaner drain through the outlet and into the container.
7. Allow the remaining fluid in the auxiliary fluid cooler to drain out.

© 2017 Whatever It Takes Transmission Parts. Inc.

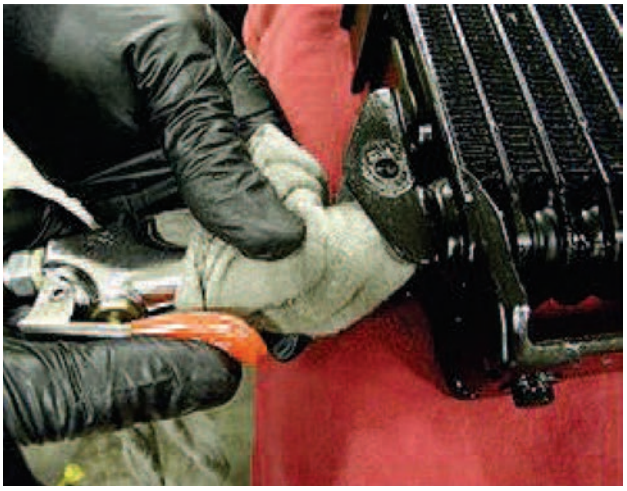

Figure 8

8. Insert the tip of an air gun into the end of the auxiliary fluid cooler inlet. (Figure 8)
9. Wrap a shop rag around the air gun tip and end of the cooler inlet to reduce blowback. (Figure 8)
10. Blow compressed air, regulated to 70-130 PSI, through the inlet side of the auxiliary fluid cooler for 10 seconds to force out any remaining fluid.

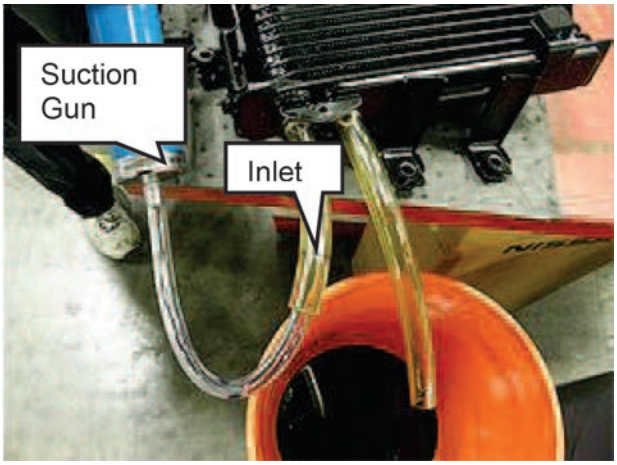

Figure 9

11. While holding the hoses securely to the auxiliary fluid cooler, flush approximately 2 liters of fluid through the cooler with a suitable suction gun.
12. Flush from the inlet side of the auxiliary fluid cooler through to the outlet. (Figure 9)
13. Allow the remaining fluid in the auxiliary fluid cooler to drain out.
14. To complete the flush, insert the tip of an air gun again into the end of the auxiliary fluid cooler inlet. (Figure 8)
15. Wrap a shop rag around the air gun tip and end of the cooler inlet. (Figure 8)
16. Blow compressed air, regulated to 70-130 PSI, through the inlet of the auxiliary fluid cooler for 10 seconds to force out any remaining fluid.
17. Reassemble the auxiliary fluid cooler and CVT fluid cooler bypass valve in the reverse order of disassembly with new o-rings.

© 2017 Whatever It Takes Transmission Parts. Inc.

1-800-940-0197

Coolers, Fittings, Cleaners and Accessories

Cleaners

M465C ..... Lubeguard “Kool-It” Supreme Coolant Treatment (16 oz)
M465CF ..... Lubeguard “Kool-It” Radiator Flush (16 oz)
M465CF-C ..... Lubeguard “Kool-It” Radiator Flush & Treatment (Dual Pack)
M465D ..... Lubeguard Kooler Kleen Flush (13.25 oz)(Aerosol)
M465KDW ..... Lubeguard Kooler Kleen Flush (18 oz)(Water Based)
M465F-18 ..... Smart Blend Cooler Flush (18 oz)(Aerosol)
M465F14B1 ..... Brand One Cooler Flush (14 oz)(Aerosol)
M465LF ..... Lubegard Flush (Use With Or Without Flush Machine)

Coolers

OC-1401 ..... Cooler, 12,000 lb (3/4” x 5” x 12.5”)(Light Duty)
OC-1402 ..... Cooler, 16,000 lb (3/4” x 5” x 15 7/8”)(Medium Duty)
OC-1403 ..... Cooler, 18,000 lb (3/4” x 7.5” x 12.5”)(Medium Duty)
OC-1676 ..... Cooler, Transaver Plus (18,0000 lb)(3/4” x 5 7/8” x 11”)(Light Duty)
OC-4334 ..... Cooler, 11,000 lb (3/4” x 4” x 11”)(3/8” Hose)(Long Barb)(Trucool)
OC-4451 ..... Cooler, 7,500 BTU (3/4” x 4” x 11”)(11/32” Hose)(Long Barb)(Trucool)
OC-4452 ..... Cooler, 9,800 BTU (3/4” x 5 3/4” x 11”)(11/32” Hose)(Long Barb)(Trucool)
OC-4454 ..... Cooler, 13,000 BTU (3/4” x 7 1/4” x 11”)(11/32” Hose)(Long Barb)(Trucool)
OC-4541 ..... Cooler, 9,000 BTU (3/4” x 3 3/4” x 11”)(3/8” Hose)(Long Barb)(Trucool)
OC-4542 ..... Cooler, 12,000 BTU (3/4” x 5 1/2” x 11”)(3/8” Hose)(Long Barb)(Trucool)
OC-4543 ..... Cooler, 15,000 BTU (3/4” x 7 1/4” x 11”)(3/8” Hose)(Long Barb)(Trucool)
OC-4588 ..... Cooler, 15,000 BTU (1 1/2” x 5 3/4” x 11”)(11/32” Hose)((Long Barb)(Trucool)
OC-4707 ..... Cooler, 16,000 BTU (3/4” x 8 1/4” x 11”)(5/16” Inverted Flare)(Hex)(Trucool)
OC-4711 ..... Cooler, 16,000 BTU (3/4” x 8 1/4” x 11”)(3/8” Inverted Flare)(Hex)(Trucool)
OC-B7B ..... Cooler, 7,500 BTU (1 1/2” x 2 3/4” x 11”)(1/2” NPT)(Trucool)
OC-L7B..... Cooler, 15,000 BTU (1 1/2” x 5 3/4” x 11”)(1/2” NPT)(Trucool)

Adapters, Fittings & Accessories

M465BR..... Cooler Line Drain Back Valve For All 3/8” Lines
M460CA..... Hose, Cooler (11/32” x 25’)(Gas Applications Only)
M460DA..... Hose, Cooler (3/8” x 25’)(Gas Applications Only)
M460FA ..... Hose, Cooler (1/2” x 25’)
M460HC ..... Mini Hose Clamp (5/16” to 7/8”)(10 Per Pack)
M460HD ..... Mini Hose Clamp (7/16” to 1”)(10 Per Pack)
M461A ..... Steel Cooler Line (5/16”)(60” Long)
M461B ..... Steel Cooler Line (3/8”)(60” Long)
OC-251 ..... Cooler Installation Kit (Hayden)
OC-253 ..... Metal Mounting Bracket Kit (For 3/4” Thick Coolers)
OC-K210..... Cooler Quik Mount Kit
OC-K250..... Cooler Quik Connect Coupler
OC-K390..... Line Fitting Kit (5/8” x 18 Inverted Flare)
TCR1001 ..... 5/16” Compression 1/4” NPT Male
TCR1002 ..... 3/8” Compression 1/4” NPT Male
TCR1003 ..... 3/8” Hose Barb To 1/4” NPT Male Fitting
TCR1004 ..... 5/16” Hose Barb To 1/4” NPT Male Fitting
TCR1005 ..... 5/16” Compression/Union
TCR1006 ..... 3/8” Compression/Union
TCR1007 ..... 1/2” Compression 1/4”NPT Male
TCR1008 ..... 1/4” NPT Fitting Tee
TCR1009 ..... 1/2” Compression/Union
TCR1010 ..... 3/8” Hose Barb To 1/2” Compression Fitting
TCR1011 ..... 3/8” Hose Barb To 3/8” Compression Fitting
TCR1012 ..... 5/16” Compression/Union (W/One Way Valve Or Drain Back Valve)
TCR1015 ..... 5/16” Hose Barb To 5/16” Compression Fitting
TCR1016 ..... 1/2” Compression/Union W/1 Way Valve
TCR1017 ..... 1/2” Hose Barb To 1/2” Compression Fitting
TCR1018 ..... 10mm Compression/Union
TCR1019 ..... 12mm Compression/Union
TCR1020 ..... 10mm Compression To 3/8” Hose Barb
TCR1021 ..... 12mm Compression To 1/2” Hose Barb

© 2017 Whatever It Takes Transmission Parts, Inc.